premium

BY LUCIDE

Light transforms a house into a home.

It shapes atmosphere, creates comfort and brings every space to life. More than simply illuminating a room, thoughtful lighting influences how we feel, how we live and how we connect with the people around us.

With Premium by Lucide, we believe exceptional lighting is timeless. It complements architecture, elevates interiors and enriches everyday life with warmth, elegance and authenticity. Because true luxury is not only what you see.
It is what you feel.

We follow the light.

For 35 years, light has been our inspiration. What began as one family's vision has grown into an international lighting brand, driven by a simple belief: exceptional lighting should enrich the way people live.

From timeless classics to contemporary design, every Lucide collection is created with the same passion for quality, craftsmanship and innovation. We carefully balance aesthetics, functionality and atmosphere, because we believe lighting should do more than illuminate a room, it should elevate every moment within it.

Today, the second generation continues that journey with the same entrepreneurial spirit, embracing new technologies while staying true to the values on which Lucide was founded.

premiu
BY

Luxurious eyecatchers to illuminate your home.

Discover our premium range of lighting products, designed exclusively for those who seek the finest in quality and elegance. Each piece in our collection is crafted with care, blending innovative technology with timeless design to create truly exceptional lighting solutions.

From elegant pendants to sleek, modern fixtures, our lighting solutions are made to enhance any space with warmth and style. Whether you're looking to make a bold statement or prefer subtle, understated elegance, our premium range offers the perfect solution for those with taste.

Made from high-quality materials, these products are built to last, ensuring durability and lasting beauty. With features like adjustable brightness, rechargeability, adaptable lighting color, and customizable options, our lighting not only brightens your space but also reflects your unique style.

Available only through premium partners, Lucide's prestigious and exclusive selection allows you to set yourself apart and elevate your product line with lighting that exhibits luxury and sophistication.

5 YEAR WARRANTY ON
EVERY PREMIUM PRODUCT

TABLE OF CONTENT

THUMBNAIL INDEX 10
LINIAL 12
BIX 36
BIXX 38
FIXXT 40
SNAX 42
SNAXX 44
STRAXX 46
CALINA 49
GISELA 62
JASMINE 93
SANTIAGO 102
MONTANA 110
APPLAUSE 121
SARDANA 133
LAMBADA 143
MENUET 152
SLALOM 159
VIDAL 165
BRAGA 171
GRIFFITH 184
MARNIK 190
JOAKIM 200
KENNETH 207
KAMIEN 216
ICONS 224

THUMBNAIL INDEX

LINIAL

Page nr: 18

BIX

Page nr: 37

BIXX

Page nr: 39

FIXXT

Page nr: 41

SNAX

Page nr: 43

SNAXX

Page nr: 45

STRAXX

Page nr: 47

CALINA

Page nr: 51

GISELA

Page nr: 65

JASMINE

Page nr: 95

SANTIAGO

Page nr: 103

MONTANA

Page nr: 111

APPLAUSE

Page nr: 123

SARDANA

Page nr: 135

LAMBADA

Page nr: 145

MENUET

Page nr: 153

SLALOM

Page nr: 163

VIDAL

Page nr: 167

BRAGA

Page nr: 173

GRIFFITH

Page nr: 185

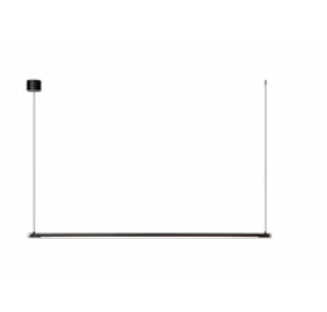

MARNIK

Page nr: 193

JOAKIM

Page nr: 201

KENNETH

Page nr: 209

KAMIEN

Page nr: 217

LINIAL

Introducing our new track lighting concept Linial, a beautifully engineered system that blends effortlessly into modern interiors. Designed to complement any modern home, this elegant system offers intuitive smart control through a mobile app or voice assistant, giving you effortless command over your lighting environment.

With the smart control system, you can fine-tune brightness and colour temperature from anywhere, while the magnetic mounting system allows for quick, tool-free repositioning of fixtures.

The sleek, minimal look makes it a true design statement.

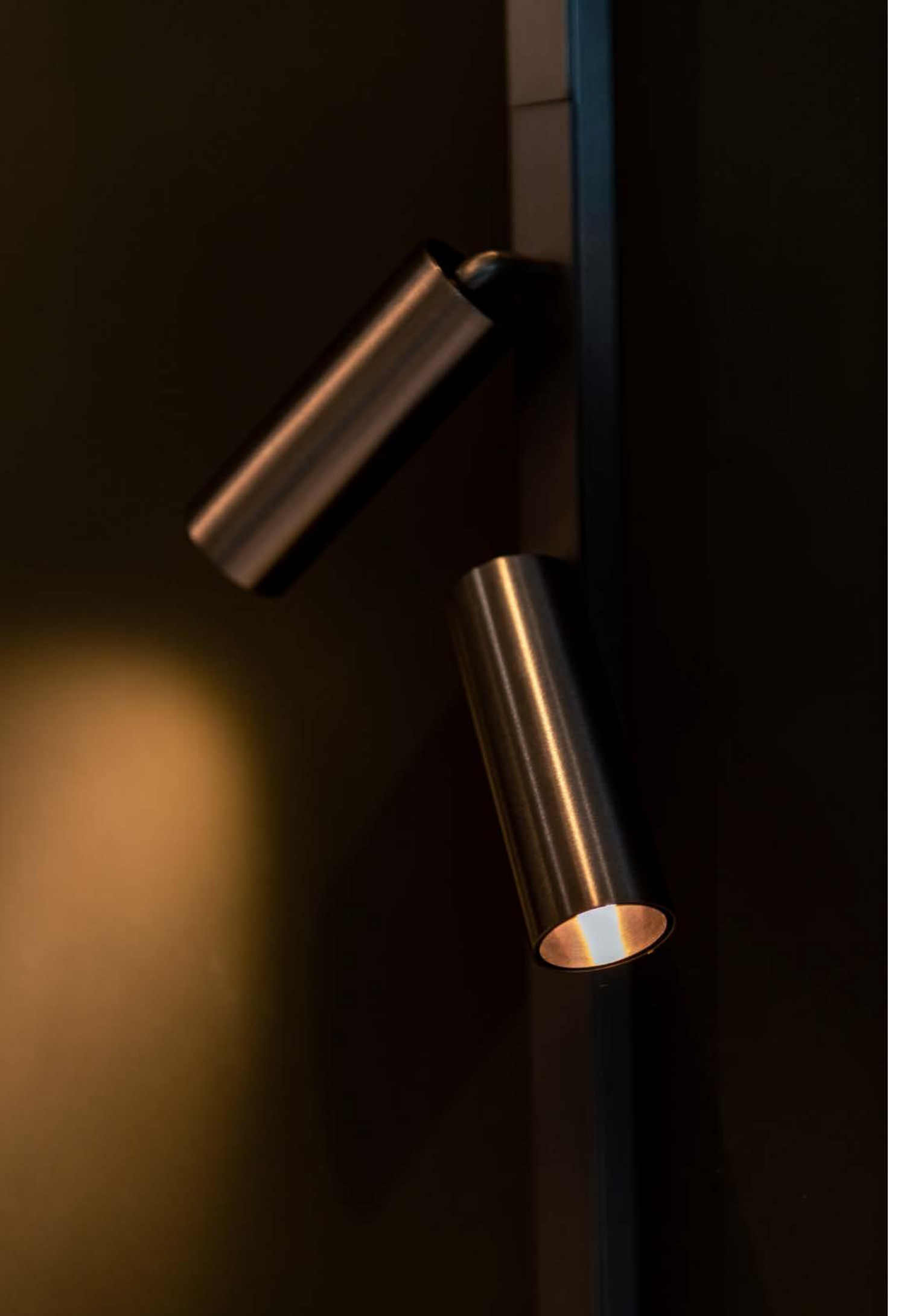

MIX & MATCH TO CREATE YOUR FAVOURITE SET-UP

The LINIAL track system gives you maximum flexibility, allowing you to move, add, or reposition lights as your needs change. It creates a clean, modern look while providing targeted illumination exactly where you want it. With a wide choice of spots and pendants, you can easily customize both the atmosphere and functionality of every room. Just click the magnetic light fixtures in and you're good to go!

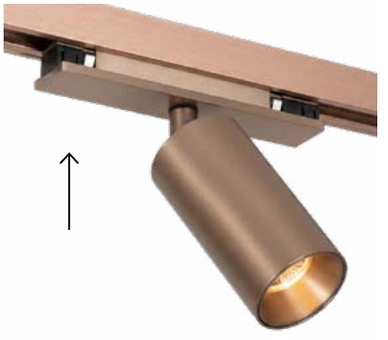

CLICK INTO RAIL

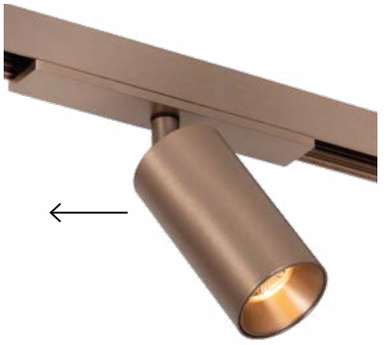

SLIDE ALONG TRACK

TILT AND DIRECT SPOT

LIGHTING

55901/08/05

Lucide Premium LINIAL BIX - 1-Circuit lighting system/ Smart Rail Lighting - Smart - 48V Track - 1xLED -Champagne

1x 8W/Integrated LED/2700-4000K/ 630lm/CCT & dimmable
Energy label: G

H: 10 cm
W: 3.5 cm
L: 3.5 cm

55901/16/05

Lucide Premium LINIAL BIXX - 1-Circuit lighting system/ Smart Rail Lighting - Smart - 48V Track - 2xLED -Champagne

2x 8W/Integrated LED/2700-4000K/2x 600lm/CCT & dimmable
Energy label: G

H: 10 cm
W: 3.5 cm
L: 17 cm

55902/10/05

Lucide Premium LINIAL MOX - 1-Circuit lighting system/ Smart Rail Lighting - Smart - 48V Track - 1xLED -Champagne

1x 10W/Integrated LED/2700-4000K/ 830lm/CCT & dimmable
Energy label: G

H: 10 cm
W: 4.5 cm
L: 4.5 cm

55902/20/05

Lucide Premium LINIAL MOXX - 1-Circuit lighting system/ Smart Rail Lighting - Smart - 48V Track - 2xLED -Champagne

2x 10W/Integrated LED/2700-4000K/2x 825lm/CCT & dimmable
Energy label: G

H: 10 cm
W: 4.5 cm
L: 17 cm

55911/10/05

Lucide Premium LINIAL VIGA 1-Circuit lighting system/ Smart Rail Lighting - Smart - 48V Track - 1xLED -Champagne

1x 10W/Integrated LED/2700-4000K/ 600lm/CCT & dimmable
Energy label: G

H: 10.6 cm
W: 4.5 cm
L: 4.5 cm

55903/12/05

Lucide Premium LINIAL GLYX - 1-Circuit lighting system/ Smart Rail Lighting - Smart - 48V Track - 1xLED -Champagne

1x 11W/Integrated LED/2700-4000K/ 700lm/CCT & dimmable
Energy label: G

H: 2.7 cm
W: 1.9 cm
L: 30.2 cm

55903/24/05

Lucide Premium LINIAL GLYXX - 1-Circuit lighting system/ Smart Rail Lighting - Smart - 48V Track - 1xLED -Champagne

1x 20W/Integrated LED/2700-4000K/ 1000lm/CCT & dimmable
Energy label: G

H: 2.7 cm
W: 1.9 cm
L: 60.2 cm

55904/06/05

Lucide Premium LINIAL FIXT - 1-Circuit lighting system/ Smart Rail Lighting - Smart - 48V Track - 1xLED - Champagne

1x 6W/Integrated LED/2700-4000K/ 600lm/CCT & dimmable
Energy label: F

H: 4.5 cm
W: 7.4 cm
L: 7.4 cm

55904/08/05

Lucide Premium LINIAL FIXXT - 1-Circuit lighting system/ Smart Rail Lighting - Smart - 48V Track - 1xLED -Champagne

1x 8W/Integrated LED/2700-4000K/ 750lm/CCT & dimmable
Energy label: F

H: 4.5 cm
W: 9.5 cm
L: 9.5 cm

55905/08/05

Lucide Premium LINIAL LUX - 1-Circuit lighting system/ Smart Rail Lighting - Smart - 48V Track - 1xLED -Champagne

1x 8W/Integrated LED/2700-4000K/ 700lm/CCT & dimmable
Energy label: G

H: 6 cm
W: 7 cm
L: 7 cm

55908/08/05

Lucide Premium LINIAL XAVI - 1-Circuit lighting system/ Smart Rail Lighting - Smart - 48V Track - 1xLED -Champagne

1x 7W/Integrated LED/2700-4000K/ 400lm/CCT & dimmable
Energy label: G

H: 4.5 cm
W: 9.5 cm
L: 9.5 cm

55909/10/05

Lucide Premium LINIAL XENIA - 1-Circuit lighting system/ Smart Rail Lighting - Smart - 48V Track - 1xLED -Champagne

1x 10W/Integrated LED/2700-4000K/ 1000lm/CCT & dimmable
Energy label: F

H: 2.7 cm
W: 1.9 cm
L: 23.2 cm

55910/08/05

Lucide Premium LINIAL TUBIZ pendant - 1-Circuit lighting system/ Smart Rail Lighting - Smart - 48V Track - 1xLED -Champagne

1x 8W/Integrated LED/2700-4000K/ 670lm/CCT & dimmable
Energy label: G

H: 33.4 cm
W: 4.5 cm
L: 4.5 cm

55906/08/05

Lucide Premium LINIAL LUXUS pendant - 1-Circuit lighting system/ Smart Rail Lighting - Smart - 48V Track - 1xLED -Champagne

1x 8W/Integrated LED/2700-4000K/ 550lm/CCT & dimmable
Energy label: G

H: 40 cm
W: 4 cm
L: 4 cm

55912/10/05

Lucide Premium LINIAL DISC pendant - 1-Circuit lighting system/ Smart Rail Lighting - Smart - 48V Track - 1xLED -Champagne

1x 10W/Integrated LED/2700-4000K/ 540lm/CCT & dimmable
Energy label: G

H: 40 cm
W: 17.1 cm
L: 17.1 cm

55901/08/08

Lucide Premium LINIAL BIX - 1-Circuit lighting system/ Smart Rail Lighting - Smart - 48V Track - 1xLED - Satin Gun Metal

1x 8W/Integrated LED/2700-4000K/ 630lm/CCT & dimmable
Energy label: G

H: 10 cm
W: 3.5 cm
L: 3.5 cm

55901/16/08

Lucide Premium LINIAL BIXX - 1-Circuit lighting system/ Smart Rail Lighting - Smart - 48V Track - 2xLED - Satin Gun Metal

2x 8W/Integrated LED/2700-4000K/2x 600lm/CCT & dimmable
Energy label: G

H: 10 cm
W: 3.5 cm
L: 17 cm

55902/10/08

Lucide Premium LINIAL MOX - 1-Circuit lighting system/ Smart Rail Lighting - Smart - 48V Track - 1xLED - Satin Gun Metal

1x 10W/Integrated LED/2700-4000K/ 830lm/CCT & dimmable
Energy label: G

H: 10 cm
W: 4.5 cm
L: 4.5 cm

55902/20/08	Lucide Premium LINIAL MOXX - 1-Circuit lighting system/ Smart Rail Lighting - Smart - 48V Track - 2xLED - Satin Gun Metal	2x 10W/Integrated LED/2700-4000K/2x 825lm/CCT & dimmable Energy label: G	H: [illegible] W: 1.5 cm L: 17 cm
55911/10/08	Lucide Premium LINIAL VIGA 1-Circuit lighting system/ Smart Rail Lighting - Smart - 48V Track - 1xLED -Satin Gun Metal	1x 10W/Integrated LED/2700-4000K/ 600lm/CCT & dimmable Energy label: G	H: 10.6 cm W: 4.5 cm L: 4.5 cm
55903/12/08	Lucide Premium LINIAL GLYX - 1-Circuit lighting system/ Smart Rail Lighting - Smart - 48V Track - 1xLED -Satin Gun Metal	1x 11W/Integrated LED/2700-4000K/ 700lm/CCT & dimmable Energy label: G	H: 2.7 cm W: 1.9 cm L: 30.2 cm
55903/24/08	Lucide Premium LINIAL GLYXX - 1-Circuit lighting system/ Smart Rail Lighting - Smart - 48V Track - 1xLED - Satin Gun Metal	1x 20W/Integrated LED/2700-4000K/ 1000lm/CCT & dimmable Energy label: G	H: 2.7 cm W: 1.9 cm L: 60.2 cm
55904/06/08	Lucide Premium LINIAL FIXT - 1-Circuit lighting system/ Smart Rail Lighting - Smart - 48V Track - 1xLED - Satin Gun Metal	1x 6W/Integrated LED/2700-4000K/ 600lm/CCT & dimmable Energy label: F	H: 4.5 cm W: 7.4 cm L: 7.4 cm
55904/08/08	Lucide Premium LINIAL FIXXT - 1-Circuit lighting system/ Smart Rail Lighting - Smart - 48V Track - 1xLED - Satin Gun Metal	1x 8W/Integrated LED/2700-4000K/ 750lm/CCT & dimmable Energy label: F	H: 4.5 cm W: 9.5 cm L: 9.5 cm

55905/08/08

Lucide Premium LINIAL LUX - 1-Circuit lighting system/ Smart Rail Lighting - Smart - 48V Track - 1xLED - Satin Gun Metal

1x 8W/Integrated LED/2700-4000K/ 700lm/CCT & dimmable
Energy label: G

H: 6 cm
W: 7 cm
L: 7 cm

55908/08/08

Lucide Premium LINIAL XAVI - 1-Circuit lighting system/ Smart Rail Lighting - Smart - 48V Track - 1xLED -Satin Gun Metal

1x 7W/Integrated LED/2700-4000K/ 400lm/CCT & dimmable
Energy label: G

H: 4.5 cm
W: 9.5 cm
L: 9.5 cm

55909/10/08

Lucide Premium LINIAL XENIA - 1-Circuit lighting system/ Smart Rail Lighting - Smart - 48V Track - 1xLED -Satin Gun Metal

1x 10W/Integrated LED/2700-4000K/ 1000lm/CCT & dimmable
Energy label: F

H: 2.7 cm
W: 1.9 cm
L: 23.2 cm

55910/08/08

Lucide Premium LINIAL TUBIZ pendant - 1-Circuit lighting system/ Smart Rail Lighting - Smart - 48V Track - 1xLED - Satin Gun Metal

1x 8W/Integrated LED/2700-4000K/ 670lm/CCT & dimmable
Energy label: G

H: 33.4 cm
W: 4.5 cm
L: 4.5 cm

55906/08/08

Lucide Premium LINIAL LUXUS pendant - 1-Circuit lighting system/ Smart Rail Lighting - Smart - 48V Track - 1xLED - Satin Gun Metal

1x 8W/Integrated LED/2700-4000K/ 550lm/CCT & dimmable
Energy label: G

H: 40 cm
W: 4 cm
L: 4 cm

55912/10/08

Lucide Premium LINIAL DISC pendant - 1-Circuit lighting system/ Smart Rail Lighting - Smart - 48V Track - 1xLED -Satin Gun Metal

1x 10W/Integrated LED/2700-4000K/ 540lm/CCT & dimmable
Energy label: G

H: 40 cm
W: 17.1 cm
L: 17.1 cm

Design your perfect configuration

The LINIAL track system can be installed both as a surface-mounted or recessed solution.

As a surface-mounted system, the track is fixed directly onto the ceiling or wall, creating a clean and visible design feature, while the recessed version integrates seamlessly into the architecture for a more minimal look.

The system can also be installed as a pendant, in both surface-mounted and recessed configurations.

Adapt the lighting configuration to your requirements. The modular track system is suitable for ceiling-mounting, pendant-mounting, and wall-mounting. LINIAL runs on a 48V low-voltage system, combining electrical safety with flexible lighting design.

ACCESSORIES

INDEX

55900/01/05

Lucide Premium LINIAL - 1-Circuit lighting system - Smart - 48V Track - 1 meter -Champagne

H: 1.8 cm
W: 1.9 cm
L: 100 cm

55900/15/05

Lucide Premium LINIAL - 1-Circuit lighting system - Smart - 48V Track - 1,5 meter -Champagne

H: 1.8 cm
W: 1.9 cm
L: 150 cm

55900/00/05

Lucide Premium LINIAL - 1-Circuit lighting system - Smart - 48V Track - 2 meter -Champagne

H: 1.8 cm
W: 1.9 cm
L: 200 cm

55900/17/05

Lucide Premium LINIAL T-connector - 1-Circuit lighting system - Smart - 48V Track - Champagne

H: 1.7 cm
W: 9 cm
L: 16 cm

55900/18/05

Lucide Premium LINIAL X-connector - 1-Circuit lighting system - Smart - 48V Track - Champagne

H: 1.7 cm
W: 16 cm
L: 16 cm

55900/19/05

Lucide Premium LINIAL L - Connector & Corner Horizontal - 1-Circuit lighting system - Smart - 48V Track - Champagne

H: 1.8 cm
W: 9 cm
L: 9 cm

55900/03/05

Lucide Premium LINIAL -Corner Vertical - 1-Circuit lighting system - Smart - 48V Track - Champagne

H: 6.7 cm
W: 6.7 cm
L: 1.9 cm

55900/07/05

Lucide Premium LINIAL Flexible - connector - 1-Circuit lighting system - Smart - 48V Track - Champagne

H: 1.7 cm
W: 1.9 cm
L: 17 cm

55900/08/05

Lucide Premium LINIAL Straight - connector - 1-Circuit lighting system - Smart - 48V Track - Champagne

H: 1.7 cm
W: 1.9 cm
L: 12 cm

55900/09/05

Lucide Premium LINIAL Power supply - 1-Circuit lighting system - Smart - 48V Track - Champagne

H: 1.7 cm
W: 1.9 cm
L: 7.5 cm

55900/11/05

Lucide Premium LINIAL Driver 200W - 1-Circuit lighting system - Smart - 48V Track - Champagne

H: 4.3 cm
W: 2.3 cm
L: 32.5 cm

55900/13/05

Lucide Premium LINIAL Connection box & Terminal block - 1-Circuit lighting system - Smart - 48V Track - Champagne

H: 3.2 cm
W: 2.2 cm
L: 12.5 cm

55900/14/05

Lucide Premium LINIAL Connection box with two wings & Terminal block - 1-Circuit lighting system - Smart - 48V Track - Champagne

H: 4.7 cm
W: 10 cm
L: 12.5 cm

55900/97/05

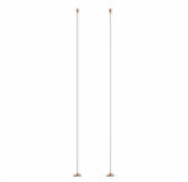

Lucide Premium LINIAL Suspension cable - 1-Circuit lighting system - Smart - 48V Track - Champagne

H: 50 cm
W: 1.4 cm
L: 5 cm

55900/98/05

Lucide Premium LINIAL Pendant connection for built-in driver - 1-Circuit lighting system - Smart - 48V Track - Champagne

H: 20
W: 4.5 cm
L: 4.5 cm

55900/05/05

Lucide Premium LINIAL Suspension with mounting base - 1-Circuit lighting system - Smart - 48V Track - Champagne

H: 20 cm
W: 8 cm
L: 30 cm

55900/10/05

Lucide Premium LINIAL Cover- 1-Circuit lighting system - Smart - 48V Track - 10cm - Champagne

H: 0.8 cm
W: 1.9 cm
L: 10 cm

55900/20/05

Lucide Premium LINIAL Cover- 1-Circuit lighting system - Smart - 48V Track - 20cm - Champagne

H: 0.8 cm
W: 1.9 cm
L: 20 cm

55900/50/05

Lucide Premium LINIAL Cover- 1-Circuit lighting system - Smart - 48V Track - 50cm - Champagne

H: 0.8 cm
W: 1.9 cm
L: 50 cm

55900/04/05

Lucide Premium LINIAL End cap - 1-Circuit lighting system - Smart - 48V Track - Set of 2 - Champagne

H: 2.2 cm
W: 0.9 cm
L: 1.9 cm

55930/00/05

Lucide Premium LINIAL Arc End cap - 1-Circuit lighting system - Smart - 48V Track - Set of 2 - Champagne

H: 1.3 cm
W: 2.1 cm
L: 1.9 cm

55920/00/05

Lucide Premium LINIAL REMOTE - Remote Control - 1-Circuit lighting system - Smart - 48V Track - Champagne

H: 3.1 cm
W: 8 cm
L: 8 cm

55900/16/30

Lucide Premium LINIAL SMART GATEWAY

H: 4 cm
W: 4 cm
L: 4 cm

55900/15/99

Lucide Premium LINIAL LED Driver 200W - 1-Circuit lighting system - Smart - 48V Track

H: 2.8 cm
W: 5 cm
L: 23.5 cm

55900/01/08

Lucide Premium LINIAL - 1-Circuit lighting system - Smart - 48V Track - 1 meter - Satin Gun Metal

H: 1.8 cm
W: 1.9 cm
L: 100 cm

55900/15/08

Lucide Premium LINIAL - 1-Circuit lighting system - Smart - 48V Track - 1,5 meter - Satin Gun Metal

H: 1.8 cm
W: 1.9 cm
L: 150 cm

55900/00/08

Lucide Premium LINIAL - 1-Circuit lighting system - Smart - 48V Track - 2 meter -Satin Gun Metal

H: 1.8 cm
W: 1.9 cm
L: 200 cm

55900/17/08

Lucide Premium LINIAL T-connector - 1-Circuit lighting system - Smart - 48V Track - Satin Gun Metal

H: 1.7 cm
W: 9 cm
L: 16 cm

55900/18/08

Lucide Premium LINIAL X-connector - 1-Circuit lighting system - Smart - 48V Track - Satin Gun Metal

H: 1.7 cm
W: 16 cm
L: 16 cm

55900/19/08

Lucide Premium LINIAL L - Connector & Corner Horizontal - 1-Circuit lighting system - Smart - 48V Track - Satin Gun Metal

H: 1.8 cm
W: 9 cm
L: 9 cm

55900/03/08

Lucide Premium LINIAL -Corner Vertical - 1-Circuit lighting system - Smart - 48V Track - Satin Gun Metal

H: 6.7 cm
W: 6.7 cm
L: 1.9 cm

55900/07/08

Lucide Premium LINIAL Flexible - connector - 1-Circuit lighting system - Smart - 48V Track - Satin Gun Metal

H: 1.7 cm
W: 1.9 cm
L: 17 cm

55900/08/08

Lucide Premium LINIAL Straight - connector - 1-Circuit lighting system - Smart - 48V Track - Satin Gun Metal

H: 1.7 cm
W: 1.9 cm
L: 12 cm

55900/09/08

Lucide Premium LINIAL Power supply - 1-Circuit lighting system - Smart - 48V Track - Satin gun metal

H: 1.7 cm
W: 1.9 cm
L: 7.5 cm

55900/11/08

Lucide Premium LINIAL Driver 200W - 1-Circuit lighting system - Smart - 48V Track - Satin gun Metal

H: 4.3 cm
W: 2.3 cm
L: 32.5 cm

55900/13/08

Lucide Premium LINIAL Connection box & Terminal block - 1-Circuit lighting system - Smart - 48V Track - Satin Gun Metal

H: 3.2 cm
W: 2.2 cm
L: 12.5 cm

55900/14/08

Lucide Premium LINIAL Connection box with two wings & Terminal block - 1-Circuit lighting system - Smart - 48V Track - Satin Gun Metal

H: 4.7 cm
W: 10 cm
L: 12.5 cm

55900/10/08

Lucide Premium LINIAL Cover- 1-Circuit lighting system - Smart - 48V Track - 10cm - Satin Gun Metal

H: 0.8 cm
W: 1.9 cm
L: 10 cm

55900/20/08

Lucide Premium LINIAL Cover- 1-Circuit lighting system - Smart - 48V Track - 20cm - Satin Gun Metal

H: 0.8 cm
W: 1.9 cm
L: 20 cm

55900/50/08

Lucide Premium LINIAL Cover- 1-Circuit lighting system - Smart - 48V Track - 50cm - Satin Gun Metal

H: 0.8 cm
W: 1.9 cm
L: 50 cm

55900/97/08

Lucide Premium LINIAL Suspension cable - 1-Circuit lighting system - Smart - 48V Track - Satin Gun Metal

H: 50 cm
W: 1.4 cm
L: 5 cm

55900/98/08

Lucide Premium LINIAL Pendant connection for built-in driver - 1-Circuit lighting system - Smart - 48V Track - Satin Gun Metal

H: 20 cm
W: 4.5 cm
L: 4.5 cm

55900/05/08

Lucide Premium LINIAL Suspension with mounting base - 1-Circuit lighting system - Smart - 48V Track - Satin Gun Metal

H: 20 cm
W: 8 cm
L: 30 cm

55900/04/08

Lucide Premium LINIAL End cap - 1-Circuit lighting system - Smart - 48V Track - Set of 2 - Satin Gun Metal

H: 2.2 cm
W: 0.9 cm
L: 1.9 cm

55930/00/08

Lucide Premium LINIAL Arc End cap - 1-Circuit lighting system - Smart - 48V Track - Set of 2 - Satin Gun Metal

H: 1.3 cm
W: 2.1 cm
L: 1.9 cm

55920/00/08

Lucide Premium LINIAL REMOTE - Remote Control - 1-Circuit lighting system - Smart - 48V Track - Satin Gun Metal

H: 3.1 cm
W: 8 cm
L: 8 cm

55900/16/30

Lucide Premium LINIAL SMART GATEWAY

H: 4 cm
W: 4 cm
L: 4 cm

55900/15/99

Lucide Premium LINIAL LED Driver 200W - 1-Circuit lighting system - Smart - 48V Track

H: 2.8 cm
W: 5 cm
L: 23.5 cm

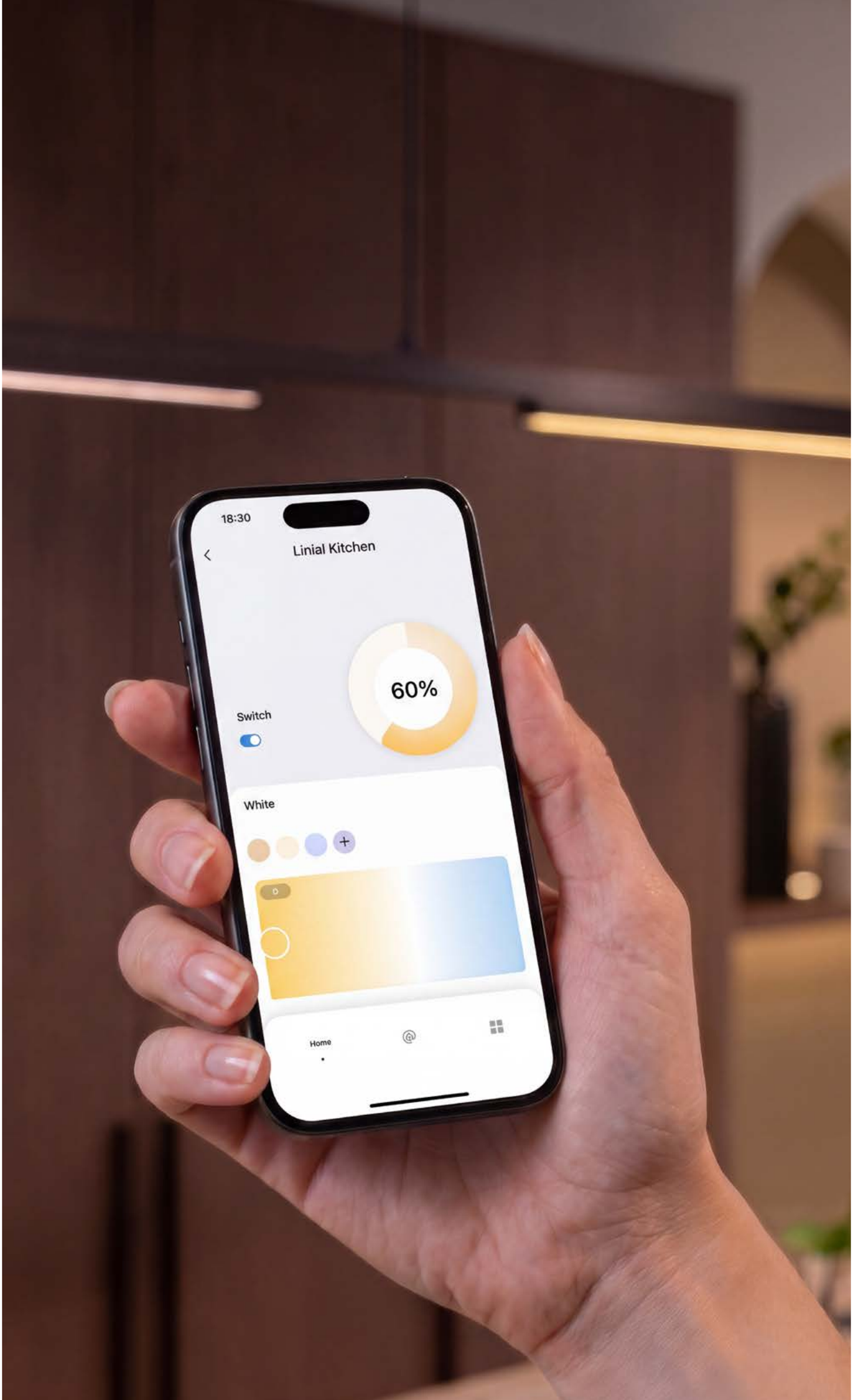
18:30
Linial Kitchen
60%
Switch
White
Home

The Smart Gateway is the brain of the LINIAL Smart Track system, turning your entire lighting setup into one intelligent, fully connected experience. Every fixture on the track becomes individually controllable via the app, giving you total freedom to shape light exactly how you want it. With the app, you can easily dim the lights or adjust the colour temperature to match the moment. Create personalised light scenes, instantly adjust the atmosphere, or set up automatic lighting moments that follow your daily rhythm.

Make smart lighting effortless, intuitive, and truly tailored to your lifestyle.

Control at your fingertips

The LINIAL remote control is designed as a refined circular dial, it offers a tactile and natural way to engage with your lighting.

A simple press lets you select and target a specific group within your LINIAL setup. Once selected, a smooth turn of the dial allows you to adjust your lighting exactly the way you want it. You can dim the intensity or fine-tune the colour temperature from crisp and functional to warm and atmospheric.

Whether you prefer using the remote control or the app, controlling your lighting becomes a seamless part of your routine.

BIX

Champagne Color

55954/08/05

Satin Gun Metal

55954/08/08

The BIX ceiling spot adds a considered focal point to kitchens and hallways. Designed for indoor use, this ceiling spotlight comes with an integrated LED module at 8W, produces light from 2700K to 4000K and is dimmable. The head rotates and tilts through 360 degrees for precise aiming. With a width of 5.5 cm, a depth of 18 cm and a height of 13.5 cm, it fits neatly in place. It comes equipped with an integrated dimmable LED lamp. Light up your space with the BIX today.

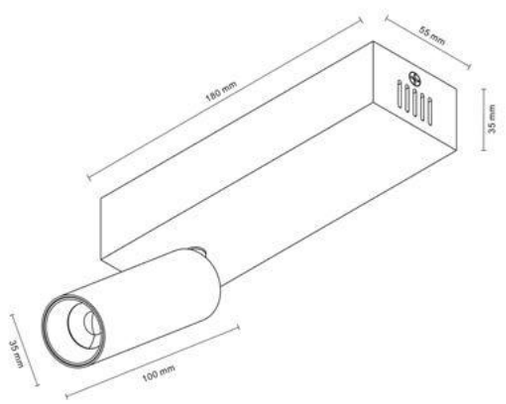

H 8 cm - W 5.5 cm - L 18 cm

Type of lamp:	1x 8W - Integrated LED
Kelvin:	2700 / 4000
Lumen:	600
Material:	Aluminum
Colors available:	Champagne Color & Satin Gun Metal
Energy label:	G
Operation:	Light Switch Control
Dimmable:	Yes
CCT operation	CCT - Smart

BIXX

Champagne Color

55954/16/05

Satin Gun Metal

55954/16/08

Bring understated style to kitchens and hallways with the BIXX ceiling spot. Designed for indoor use, this ceiling spotlight comes with 2 integrated LED modules at 8W each, produces light from 2700K to 4000K and is dimmable. The head rotates and tilts through 360 degrees for precise aiming. With a width of 5.5 cm, a depth of 28 cm and a height of 13.5 cm, it fits neatly in place. It comes equipped with integrated dimmable LED lamps. Discover the BIXX today.

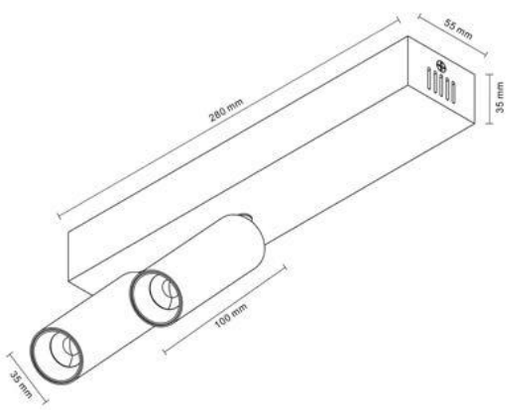

Type of lamp:	2x 8W - Integrated LED
Kelvin:	2700 / 4000
Lumen:	1200
Material:	Aluminum
Colors available:	Champagne Color & Satin Gun Metal
Energy label:	G
Operation:	Light Switch Control
Dimmable:	Yes
CCT operation	CCT - Smart

H 8 cm - W 5.5 cm - L 28 cm

FIXXT

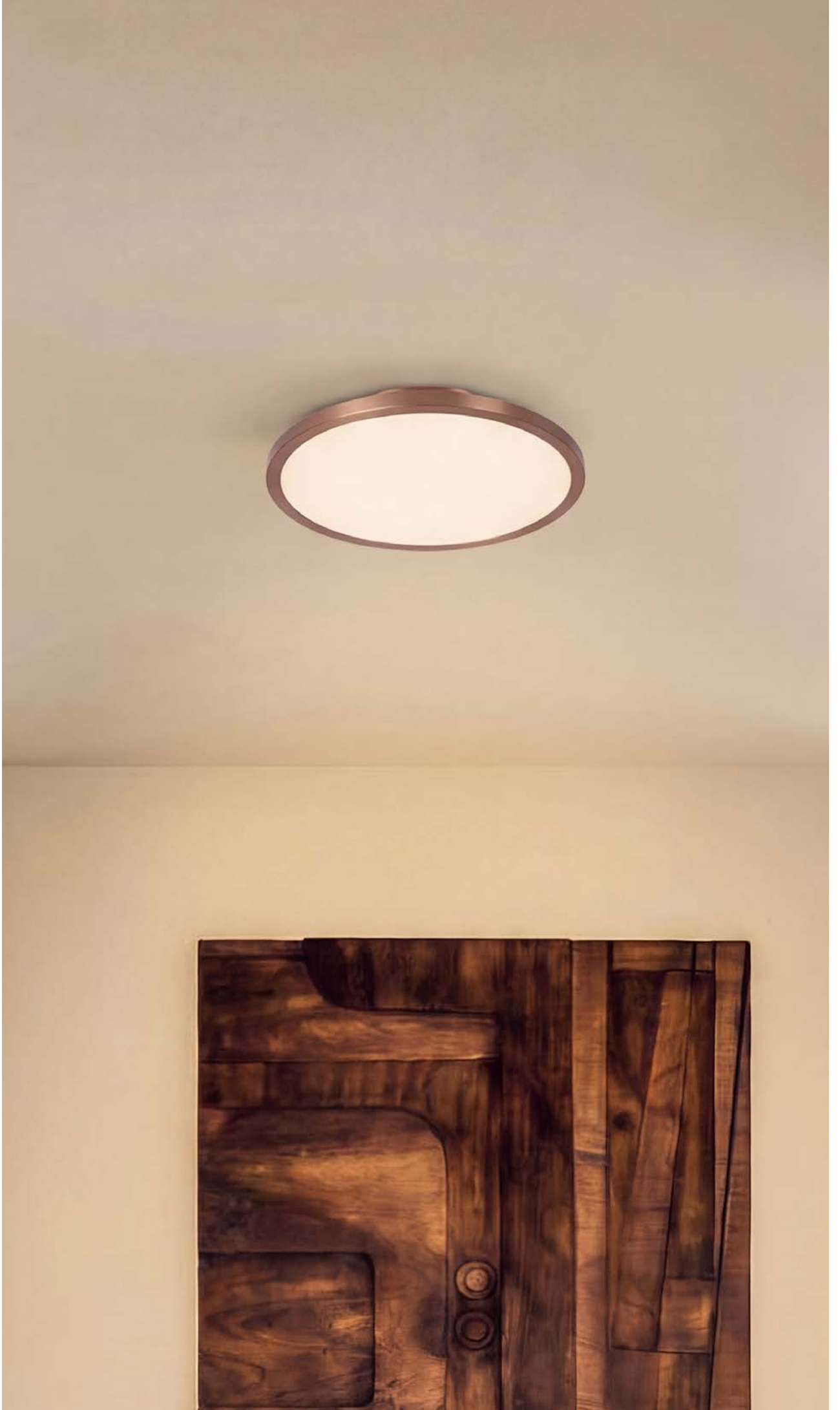

Champagne Color & Opal

55107/15/05

Satin Gun Metal & Opal

55107/15/08

The FIXXT ceiling spot adds a considered focal point to kitchens and hallways. Designed for indoor use, this ceiling spotlight comes with an integrated LED module at 15W, produces light from 2700K to 4000K and is dimmable. The head is fixed and does not adjust. With a width of 19.7 cm, a depth of 19.7 cm and a height of 4.5 cm, it fits neatly in place. It comes equipped with an integrated dimmable LED lamp. Light up your space with the FIXXT today.

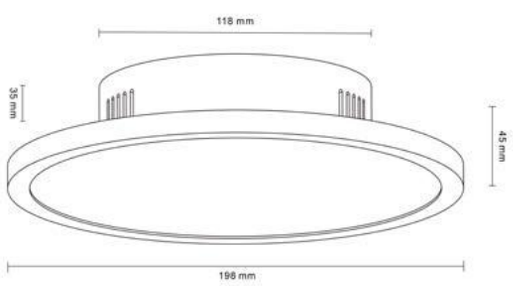

Type of lamp:	1x 15W - Integrated LED
Kelvin:	2700 / 4000
Lumen:	870
Material:	Aluminum
Colors available:	Champagne Color & Satin Gun Metal
Energy label:	G
Operation:	Light Switch Control
Dimmable:	Yes
CCT operation	CCT - Smart

H 4.5 cm - W 19.7 cm - L 19.7 cm

SNAX

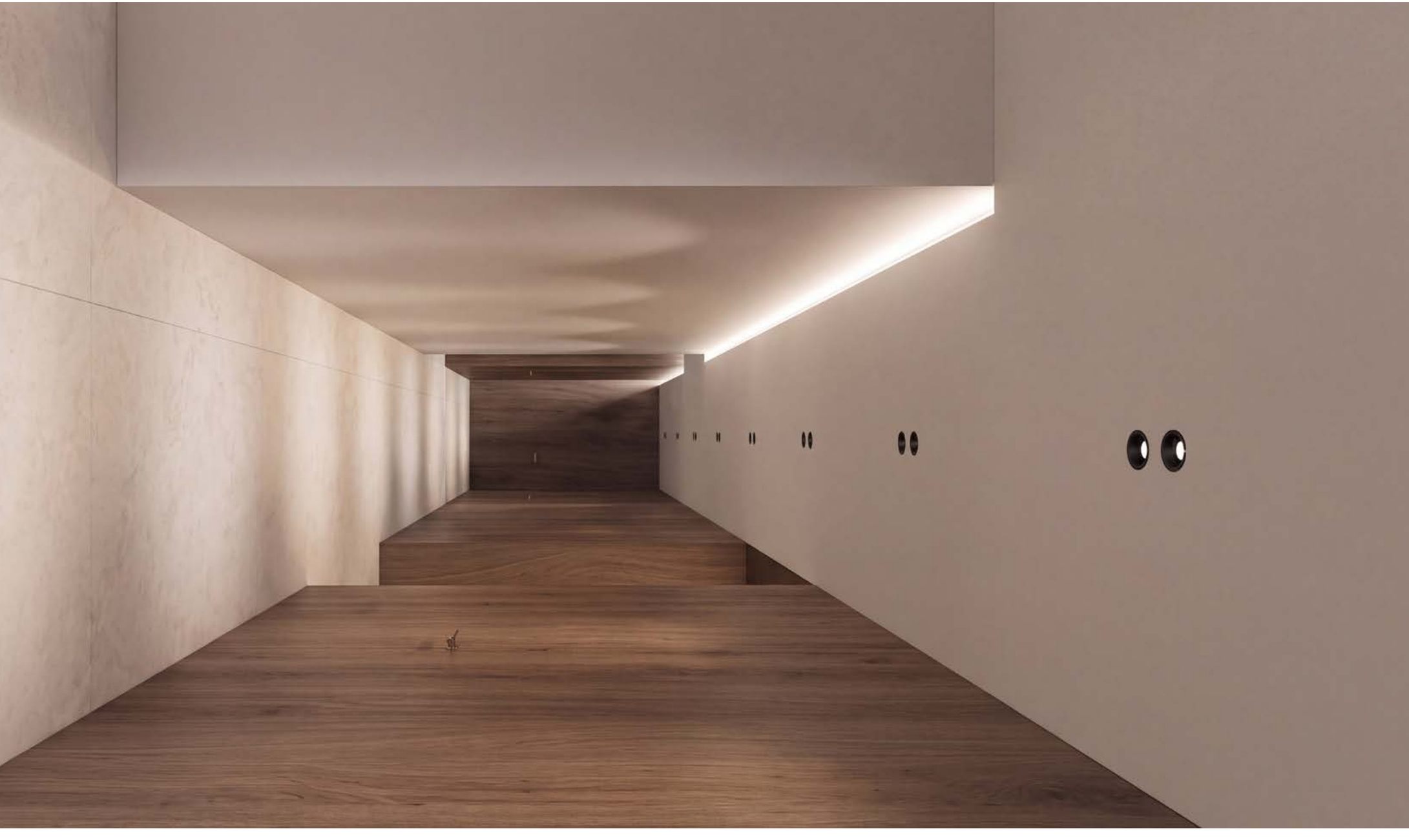

Champagne Color

55950/08/05

Satin Gun Metal

55950/08/08

The SNAX recessed spot adds a considered focal point to kitchen and hallway ceilings. Designed for indoor use, this recessed light comes with an integrated LED module at 8W, produces light from 2700K to 4000K and is dimmable. The head is fixed and does not adjust. It has a diameter of 6 cm and a recessed depth of 6 cm. It comes equipped with an integrated dimmable LED lamp. It is an easy way to elevate the everyday look of a room. Light up your space with the SNAX today.

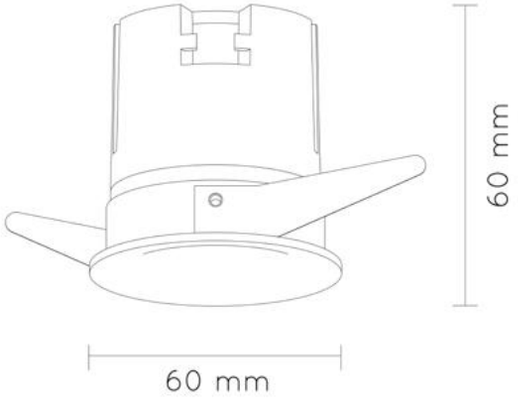

H 6 cm - W 6 cm - L 6 cm

Type of lamp:	1x 8W - Integrated LED
Kelvin:	2700 / 3300 / 4000
Lumen:	540
Material:	Aluminum
Colors available:	Champagne Color & Satin Gun Metal
Energy label:	G
Operation:	Light Switch Control
Dimmable:	Yes
CCT operation	CCT - DIP switch - in mounting plate

SNAXX

Champagne Color

55951/12/05

Satin Gun Metal

55951/12/08

The SNAXX recessed spot adds a considered focal point to kitchen and hallway ceilings. Designed for indoor use, this recessed light comes with an integrated LED module at 12W, produces light from 2700K to 4000K and is dimmable. The head is fixed and does not adjust. It has a diameter of 8 cm and a recessed depth of 6 cm. It comes equipped with an integrated dimmable LED lamp. A calm, considered piece built for everyday use. Light up your space with the SNAXX today.

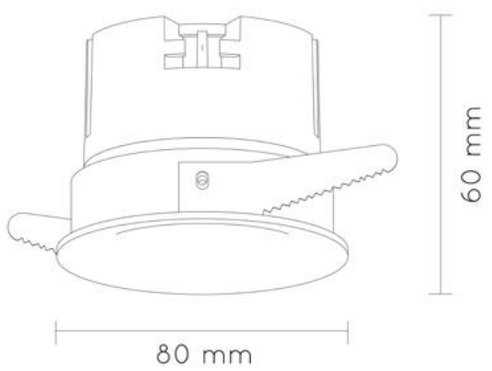

H 6 cm - W 8 cm - L 8 cm

Type of lamp:	1x 12W - Integrated LED
Kelvin:	2700 / 3300 / 4000
Lumen:	900
Material:	Aluminum
Colors available:	Champagne Color & Satin Gun Metal
Energy label:	G
Operation:	Light Switch Control
Dimmable:	Yes
CCT operation	CCT - DIP switch - in mounting plate

STRAXX

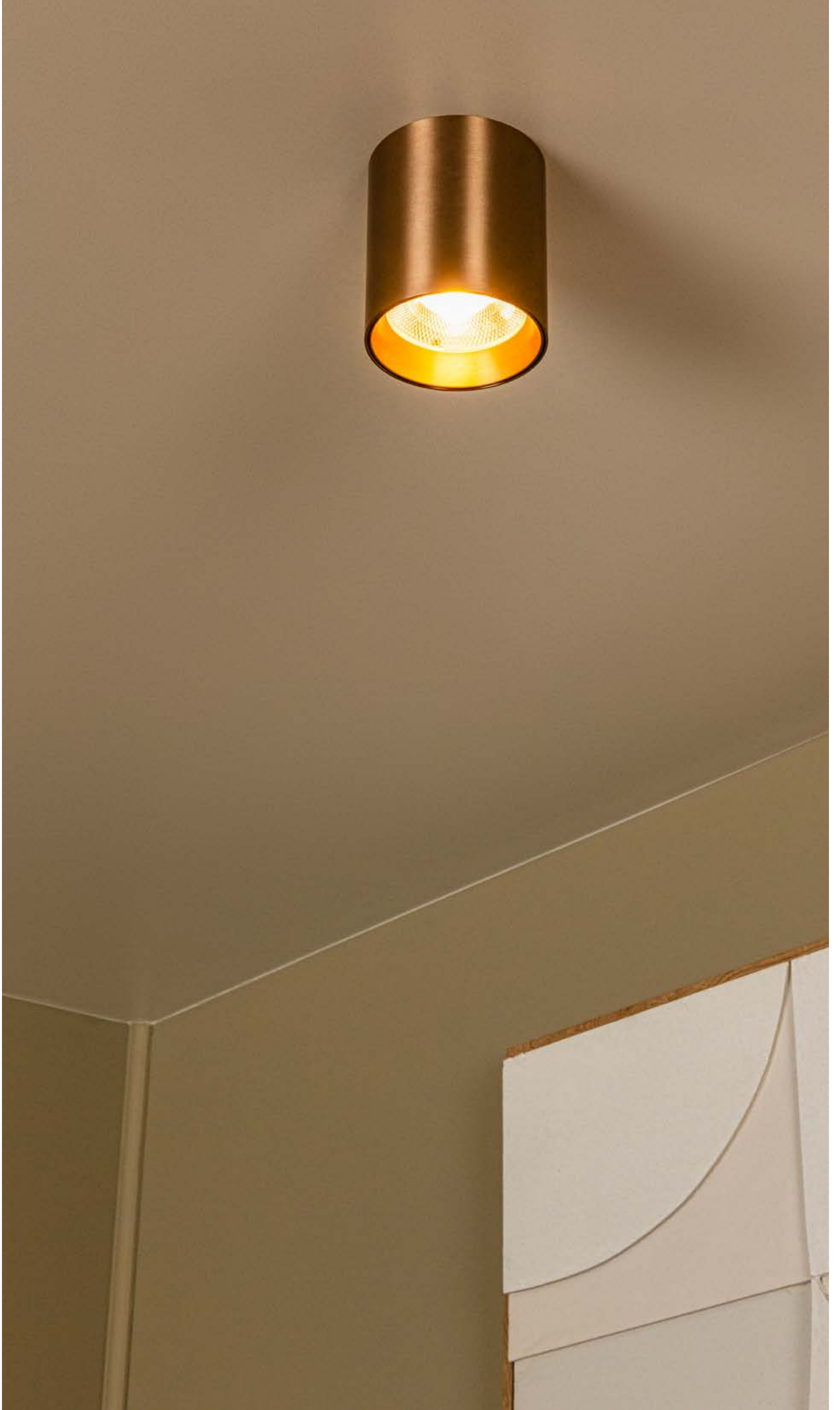

Champagne Color

55953/15/05

Satin Gun Metal

55953/15/08

Looking to update kitchens and hallways? The STRAXX ceiling spot fits right in. Designed for indoor use, this ceiling spotlight comes with an integrated LED module at 15W, produces light from 2700K to 4000K and is dimmable. The head is fixed and does not adjust. With a width of 8 cm, a depth of 8 cm and a height of 9 cm, it fits neatly in place. It comes equipped with an integrated dimmable LED lamp. Explore the STRAXX and light up your space today.

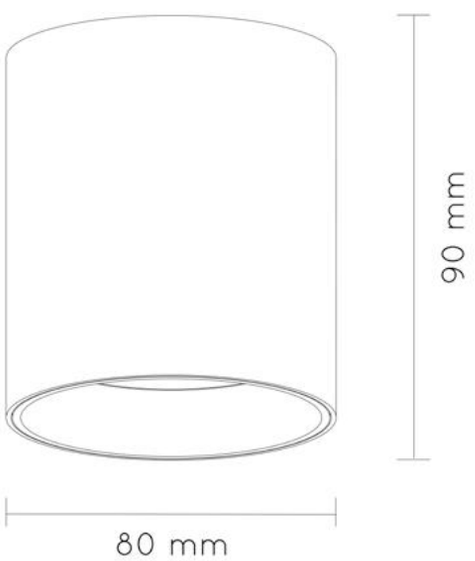

H 9 cm - W 8 cm - L 8 cm

Type of lamp:	1x 15W - Integrated LED
Kelvin:	2700 / 3300 / 4000
Lumen:	980
Material:	Aluminum
Colors available:	Champagne Color & Satin Gun Metal
Energy label:	G
Operation:	Light Switch Control
Dimmable:	Yes
CCT operation	CCT - DIP switch - in mounting plate

VIBRANT TOUCH OF MESSING

2440 4/ 07/ 30

CALINA

INDEX

BEAUTIFUL OFF

STUNNING ON

Black & Opal

24406/07/30

Coffee & Amber

24406/07/96

Bring luxury and modern elegance to your interior with the Lucide CALINA Pendant Lamp. This stylish pendant, made from high-quality acrylic, is height-adjustable and equipped with an integrated, dimmable 7W LED light source. The 2700K color temperature provides warm, atmospheric lighting perfect for any time of the day. This premium pendant lamp combines functionality with design and is easy to control via an external dimmer. Ideal for spaces where refined light is desired, such as the dining room or living room. Enhance your interior with this lighting solution!

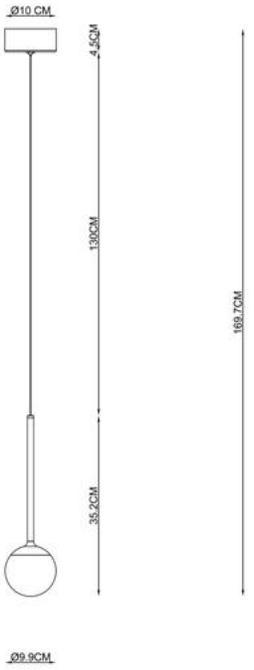

H 169.7 max. cm - W 9.9 cm - L 9.9 cm

Type of lamp:	1x 7W - Integrated LED
Kelvin:	2200 / 2700 / 3300
Lumen:	700
Material:	Acrylic & Aluminum
Colors available:	Black, Coffee & Amber
Energy label:	F
Operation:	Light Switch Control
Dimmable:	Yes
CCT operation	CCT - DIP switch - in mounting plate

INDEX

Coffee & Amber

24406/36/96

With its understated silhouette, the CALINA pendant light works as a pendant lamp for living rooms, bedrooms, hallways and beyond. Inside, it has an integrated LED source up to 8.2W, from 2200K to 3300K, dimmable. This version holds 5 light points, giving a fuller spread of light over a table or seating area. With a width of 10 cm and a height of 209.2 cm, this pendant light fits seamlessly above a dining table or kitchen island. Like other Lucide pendant lights, its cord is height adjustable, so it can hang at the ideal level. Bring the CALINA home today.

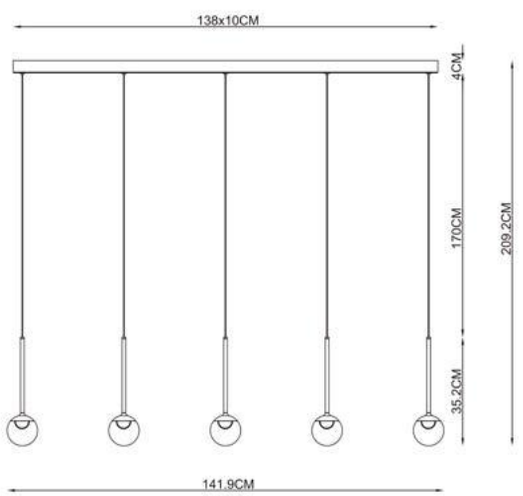

Type of lamp:	5x 8.2W - Integrated LED
Kelvin:	2200 / 2700 / 3300
Lumen:	1200
Material:	Acrylic & Aluminum
Colors available:	Black, Coffee & Amber
Energy label:	G
Operation:	Light Switch Control
Dimmable:	Yes
CCT operation	CCT - DIP switch - in mounting plate

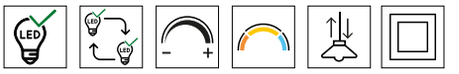

H 209.2 max. cm - W 10 cm - L 141.9 cm

AMBER GLASS WITH COFFEE
COLOURED DETAILS

Black & Opal

24406/86/30

Coffee & Amber

24406/86/96

Elevate the style of your interior with the Lucide CALINA Pendant Lamp from the Premium collection. This luxurious pendant lamp features 12 integrated, dimmable LED light points of 7W each, emitting a warm white light of 2700K. Ideal for use in living rooms or above dining tables, and height-adjustable to perfectly fit your space. Made from high-quality acrylic and aluminum, the CALINA exudes modern elegance. As part of the Premium collection, this lamp not only offers functional lighting but also adds a touch of luxury to your interior.

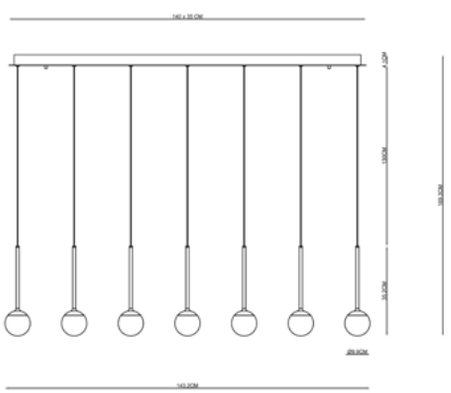

Type of lamp:	12x 7W - Integrated LED
Kelvin:	2200 / 2700 / 3300
Lumen:	7320
Material:	Acrylic & Aluminum
Colors available:	Black, Coffee & Amber
Energy label:	G
Operation:	Light Switch Control
Dimmable:	Yes
CCT operation	CCT - DIP switch - in mounting plate

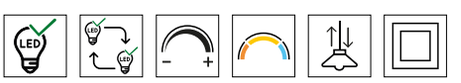

H 169.3 max. cm - W 35 cm - L 143.2 cm

BEAUTIFUL OFF

STUNNING ON

Black & Opal

24406/37/30

Amber & Coffee

24406/37/96

The Lucide CALINA pendant lamp combines a contemporary style with versatile functionality. This pendant lamp, part of the Premium collection, is equipped with integrated, dimmable LED light sources. The lamp emits a warm white light with a fixed color temperature of 2700K. With a diameter of 41,8 cm and a maximum height of 289,3 cm, this lamp is ideal for above the dining table or in the living room. Add elegance and practical lighting to your interior with this refined lighting solution.

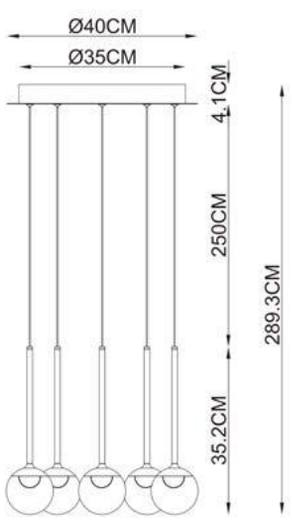

Type of lamp:	5x 8.2W - Integrated LED
Kelvin:	2200 / 2700 / 3300
Lumen:	260
Material:	Acrylic & Aluminum
Colors available:	Black, Coffee & Amber
Energy label:	G
Operation:	Light Switch Control
Dimmable:	Yes
CCT operation	CCT - DIP switch - in mounting plate

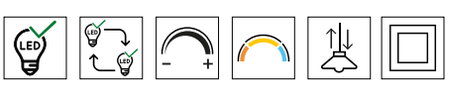

H 289.3 max. cm - W 41.8 cm - L 41.8 cm

Black & Opal

24406/84/30

Coffee & Amber

24406/84/96

Illuminate your interior with the modern Lucide CALINA Pendant Lamp from the Premium collection. This elegant pendant, equipped with 12 integrated 7W LED light points, emits a warm white light of 2700K that is dimmable for the perfect ambiance. With a diameter of 69.9 cm and height-adjustable, CALINA fits effortlessly into any space, from your dining room to your living room. The high-quality acrylic and aluminum emphasize the sleek design, while the dimming function ensures maximum flexibility. Part of the Premium range, this lamp combines style and functionality in a refined way, perfect for design lovers.

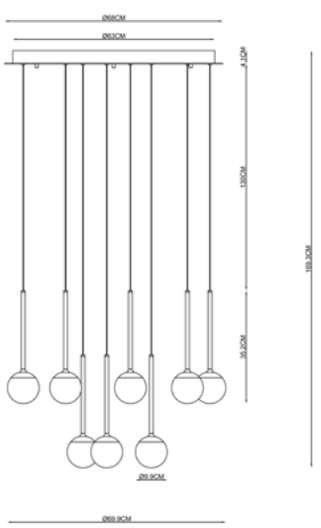

Type of lamp:	12x 7W - Integrated LED
Kelvin:	2200 / 2700 / 3300
Lumen:	7320
Material:	Acrylic & Aluminum
Colors available:	Black, Coffee & Amber
Energy label:	G
Operation:	Light Switch Control
Dimmable:	Yes
CCT operation	CCT - DIP switch - in mounting plate

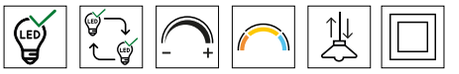

H 209.3 max. cm - W 69.9 cm - L 69.9 cm

GISELA

13494/18/62

Amber & Black

13494/04/62

This glass ball may not show you the future, but it will illuminate your living room, dining room, office or hallway. Gisela is a hanging lamp that consists of a amber, glass ball and that is adjustable in height. The integrated LED bulb is dimmable and spreads warm, white light. Its timeless, spherical design works well in both classic interiors and modern homes. Install Gisela in series above the dining table or opt for a single piece that attracts attention: you will always score with this hanging lamp.

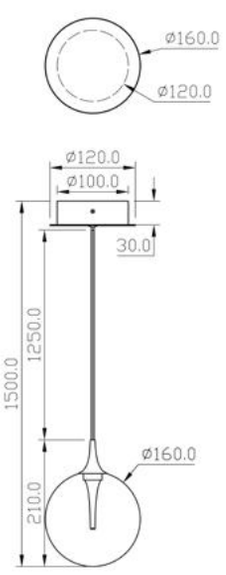

Type of lamp:	1x 5W - Integrated LED
Kelvin:	2700
Lumen:	270
Material:	Glass & Metal
Colors available:	Amber
Energy label:	G
Operation:	Light Switch Control
Dimmable:	Yes

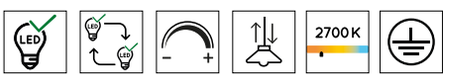

H 150 max. cm - W 16 cm - L 16 cm

BEAUTIFUL OFF
STUNNING ON

Amber & Black

13494/10/62

This glass ball may not show you the future, but it will illuminate your living room, dining room, office or hallway. Gisela is a hanging lamp that consists of a amber, glass ball and that is adjustable in height. The integrated LED bulb is dimmable and spreads warm, white light. Its timeless, spherical design works well in both classic interiors and modern homes. Install Gisela in series above the dining table or opt for a single piece that attracts attention: you will always score with this hanging lamp.

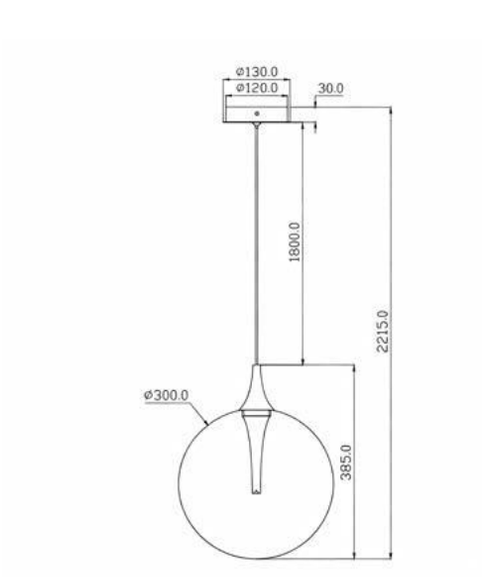

Type of lamp:	1x 9.4W - Integrated LED
Kelvin:	2700
Lumen:	715
Material:	Glass & Metal
Colors available:	Amber
Energy label:	G
Operation:	Light Switch Control
Dimmable:	Yes

H 221 max. cm - W 30 cm - L 30 cm

Amber & Black

13494/11/62

Do you sometimes find it difficult to keep all the balls in the air? Leave that to Gisela, a hanging lamp that consists of different pendants with amber, glass balls, each of which is adjustable in height. The integrated LED bulbs are dimmable and spread warm, white light. This timeless, spherical design works well in both classic interiors and modern homes. Whether you hang them at the same height or playfully descending: you will always score with this elegant hanging lamp.

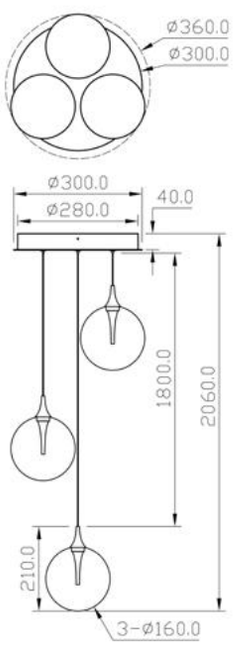

H 206 max. cm - W 36 cm - L 36 cm

Type of lamp:	3x 4.3W - Integrated LED
Kelvin:	2700
Lumen:	950
Material:	Glass & Metal
Colors available:	Amber
Energy label:	G
Operation:	Light Switch Control
Dimmable:	Yes

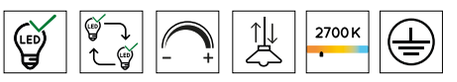

Amber & Black

13494/18/62

Do you sometimes find it difficult to keep all the balls in the air? Leave that to Gisela, a hanging lamp that consists of different pendants with amber, glass balls, each of which is adjustable in height. The integrated LED bulbs are dimmable and spread warm, white light. This timeless, spherical design works well in both classic interiors and modern homes. Whether you hang them at the same height or playfully descending: you will always score with this elegant hanging lamp.

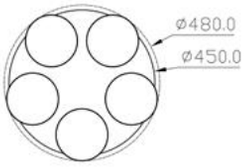

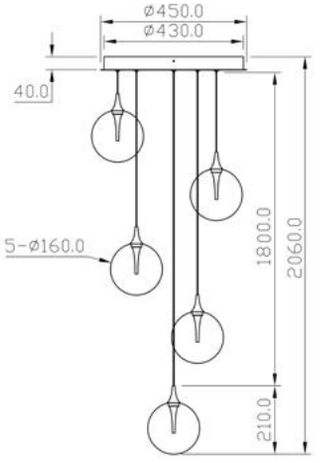

H 206 max. cm - W 48 cm - L 48 cm

Type of lamp:	5x 3.8W - Integrated LED
Kelvin:	2700
Lumen:	1500
Material:	Glass & Metal
Colors available:	Amber
Energy label:	G
Operation:	Light Switch Control
Dimmable:	Yes

WARM AMBER GLASS

BEAUTIFUL OFF
STUNNING ON

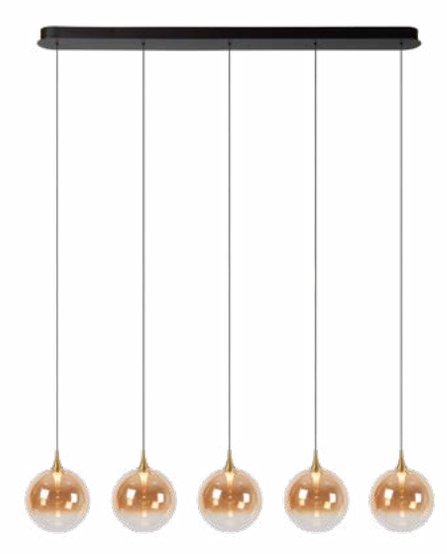

Amber & Black

13494/19/62

Do you sometimes find it difficult to keep all the balls in the air? Leave that to Gisela, a hanging lamp that consists of different pendants with clear, glass balls, each of which is adjustable in height. The integrated LED bulbs are dimmable and spread warm, white light. This timeless, spherical design works well in both classic interiors and modern homes. Whether you hang them at the same height or playfully descending: you will always score with this elegant hanging lamp.

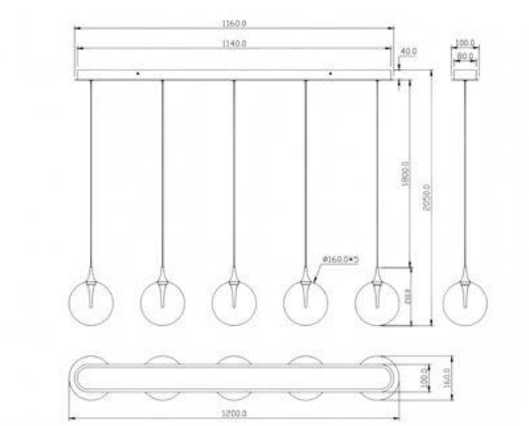

Type of lamp:	5x 4W - Integrated LED
Kelvin:	2700
Lumen:	1750
Material:	Glass & Metal
Colors available:	Amber
Energy label:	F
Operation:	Light Switch Control
Dimmable:	Yes

H 205 max. cm - W 16 cm - L 120 cm

premium
BY LUČIDE

Amber & Black

13494/29/62

Do you sometimes find it difficult to keep all the balls in the air? Leave that to Gisela, a hanging lamp that consists of different pendants with clear, glass balls, each of which is adjustable in height. The integrated LED bulbs are dimmable and spread warm, white light. This timeless, spherical design works well in both classic interiors and modern homes. Whether you hang them at the same height or playfully descending: you will always score with this elegant hanging lamp.

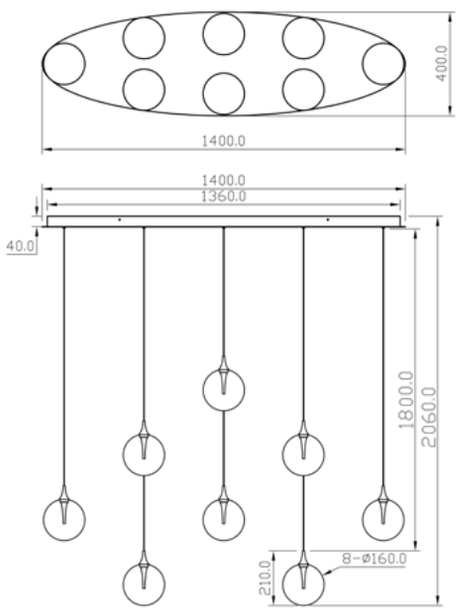

H 206 max. cm - W 40 cm - L 140 cm

Type of lamp:	8x 3.9W - Integrated LED
Kelvin:	2700
Lumen:	2500
Material:	Glass & Metal
Colors available:	Amber
Energy label:	G
Operation:	Light Switch Control
Dimmable:	Yes

Amber & Black

13494/27/62

Do you sometimes find it difficult to keep all the balls in the air? Leave that to Gisela, a hanging lamp that consists of different pendants with clear, glass balls, each of which is adjustable in height. The integrated LED bulbs are dimmable and spread warm, white light. This timeless, spherical design works well in both classic interiors and modern homes. Whether you hang them at the same height or playfully descending: you will always score with this elegant hanging lamp.

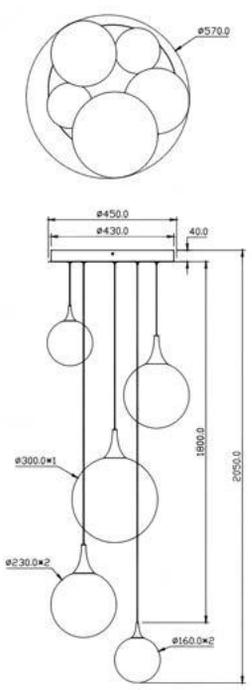

H 205 max. cm - W 57 cm - L 57 cm

Type of lamp:	1x 10W, 2x 8W, 2x 4W - Integrated LED
Kelvin:	2700
Lumen:	1960
Material:	Glass & Metal
Colors available:	Amber
Energy label:	F
Operation:	Light Switch Control
Dimmable:	Yes

Amber & Black

13494/41/62

Do you sometimes find it difficult to keep all the balls in the air? Leave that to Gisela, a hanging lamp that consists of different pendants with clear, glass balls, each of which is adjustable in height. The integrated LED bulbs are dimmable and spread warm, white light. This timeless, spherical design works well in both classic interiors and modern homes. Whether you hang them at the same height or playfully descending: you will always score with this elegant hanging lamp.

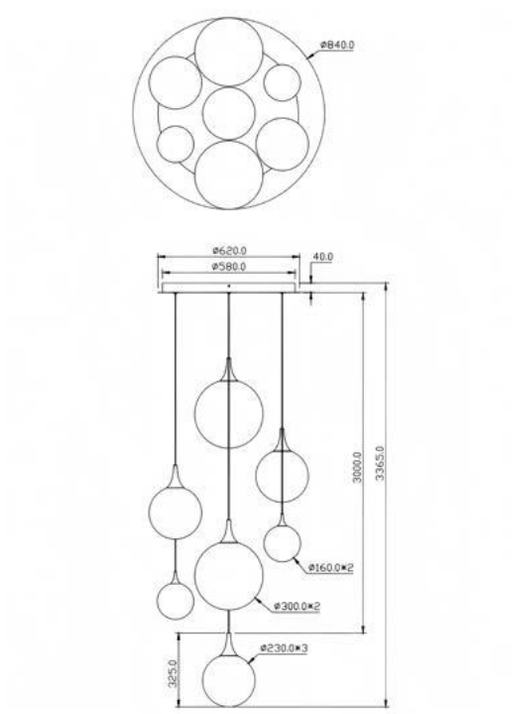

H 336.5 max. cm - W 84 cm - L 84 cm

Type of lamp:	2x 8W, 3x 6W & 2x 4W - Integrated LED
Kelvin:	2700
Lumen:	3600
Material:	Glass & Metal
Colors available:	Amber
Energy label:	F
Operation:	Light Switch Control
Dimmable:	Yes

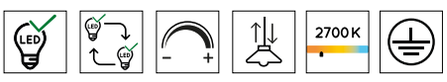

INDEX

13494/44/62

Amber & Black

13494/44/62

Do you sometimes find it difficult to keep all the balls in the air? Leave that to Gisela, a hanging lamp that consists of different pendants with clear, glass balls, each of which is adjustable in height. The integrated LED bulbs are dimmable and spread warm, white light. This timeless, spherical design works well in both classic interiors and modern homes. Whether you hang them at the same height or playfully descending: you will always score with this elegant hanging lamp.

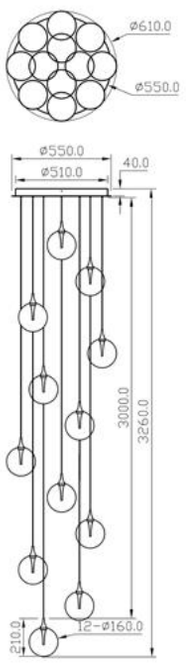

H 326 max. cm - W 61 cm - L 61 cm

Type of lamp:	12x 3.5W - Integrated LED
Kelvin:	2700
Lumen:	3360
Material:	Glass & Metal
Colors available:	Amber
Energy label:	G
Operation:	Light Switch Control
Dimmable:	Yes

Amber & Black

13594/04/62

Are you looking for a mood setter that is compact, powerful and yet easy to use? Gisela is a no-brainer. The clear glass sphere with integrated LED bulb rests on an elegant, slim base. Simply switch the table lamp on or off via the switch on the cord and immediately enjoy the warm, white light that Gisela sends out. It feels completely at home in a modern interior, from the living room to the bedroom or as a mood setter in the hall.

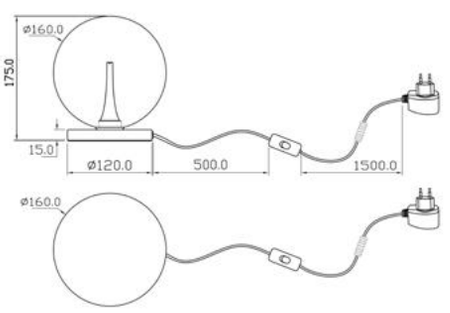

Type of lamp:	1x 5W - Integrated LED
Kelvin:	2700
Lumen:	250
Material:	Glass & Metal
Colors available:	Amber
Energy label:	G
Operation:	Dimmer - In The Cord
Dimmable:	Yes

H 17.5 cm - W 16 cm - L 16 cm

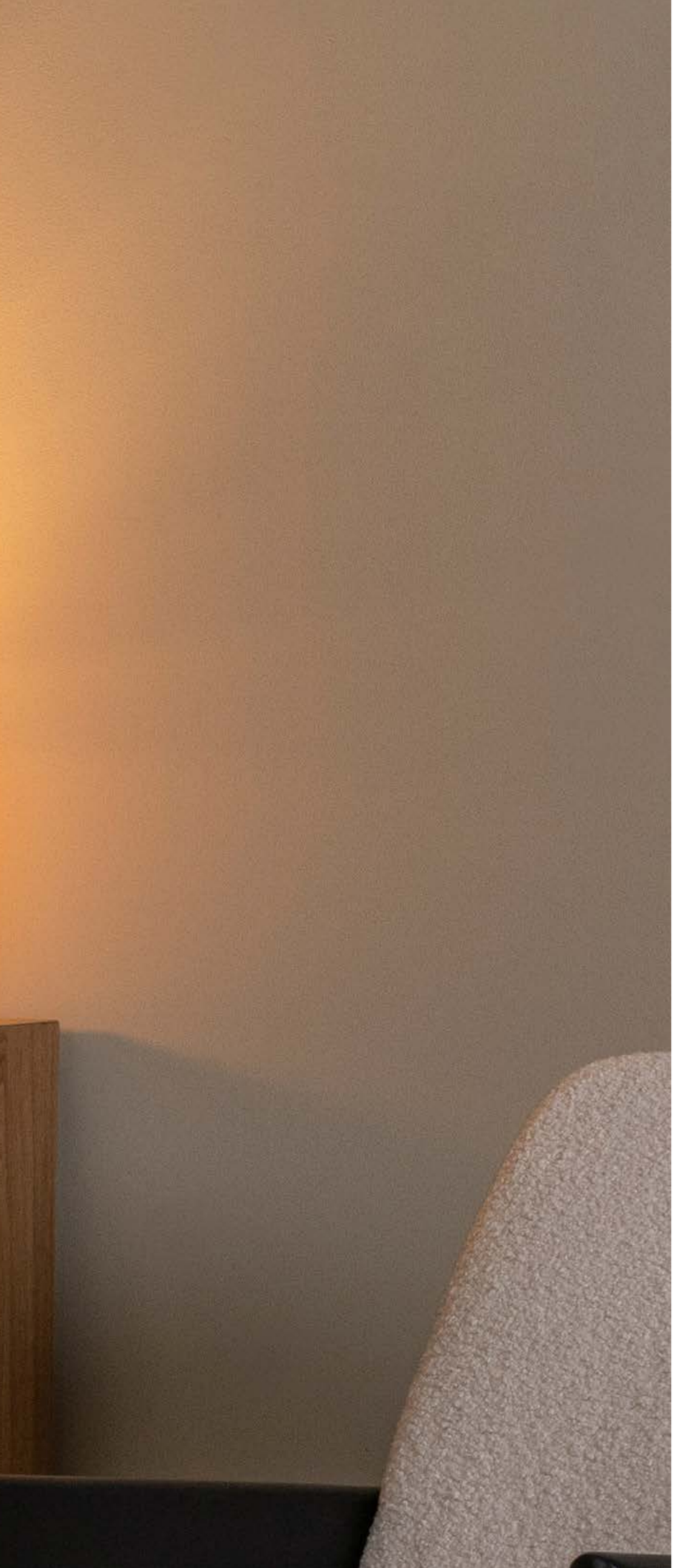

INDEX

1359 4/10/62

Amber & Matt Gold / Brass

13594/10/62

Warm ambiance and luxurious design come together in GISELA, a Premium table lamp crafted for modern interiors. The amber-tinted glass globe radiates a soft, diffuse glow, powered by an integrated 12W LED with a soothing 2500K color temperature. Its elegant matt gold base adds a chic accent, while the in-cord dimmer lets you fine-tune the lighting to suit any mood or setting. With a diameter of 30 cm and a height of 31.8 cm, GISELA fits effortlessly on side tables, dressers, or shelves. Add timeless charm to your living space with this decorative table light.

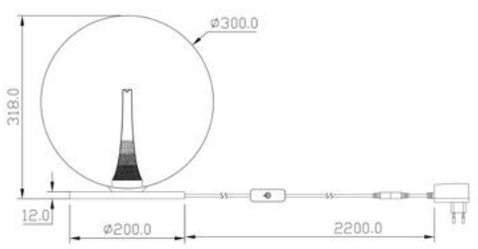

Type of lamp:	1x 12W - Integrated LED
Kelvin:	2500
Lumen:	850
Material:	Glass & Metal
Colors available:	Amber
Energy label:	G
Operation:	Dimmer - In The Cord
Dimmable:	Yes

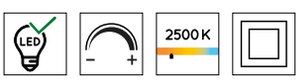

H 31.8 cm - W 30 cm - L 30 cm

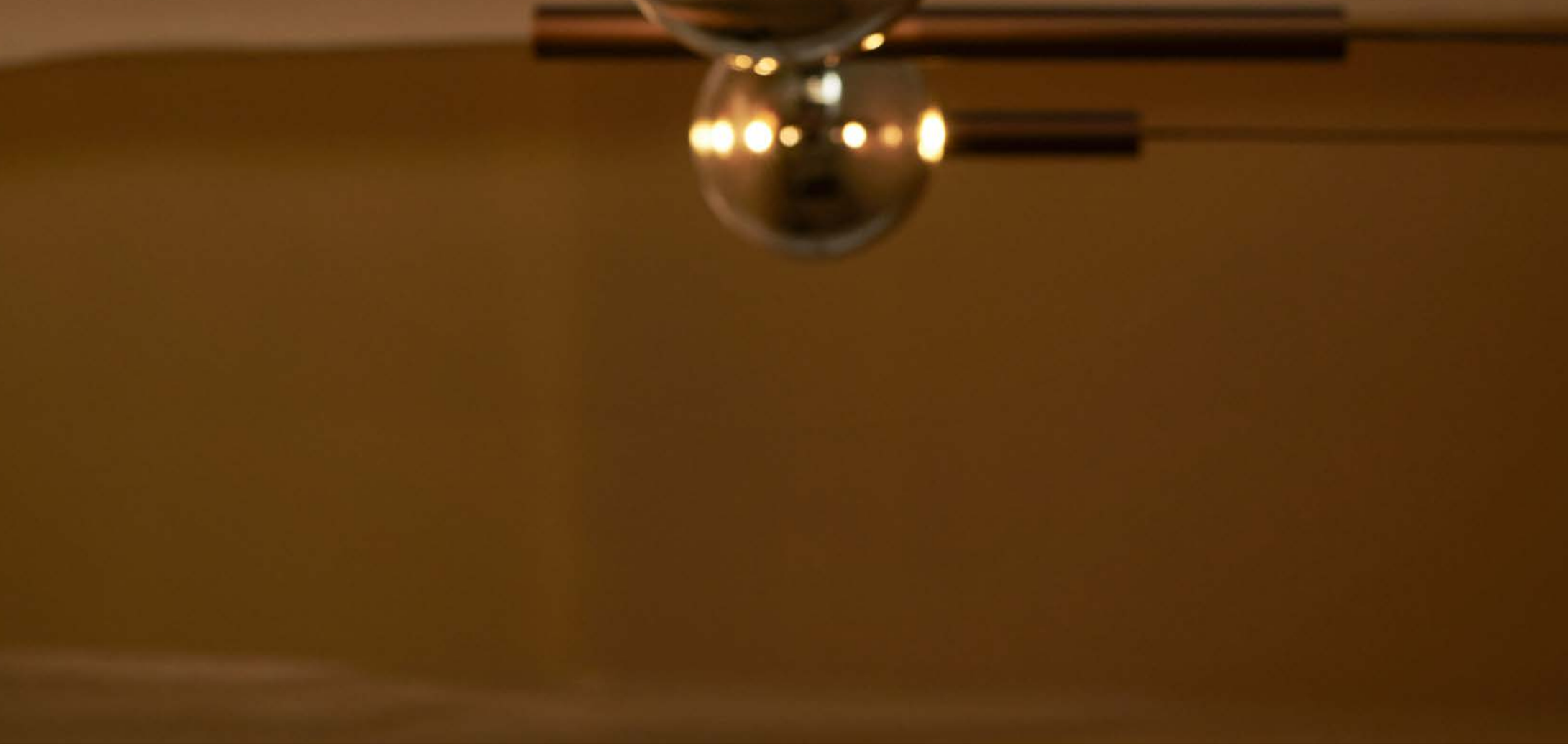

74420/07/65

JASMINE

INDEX

BEAUTIFUL OFF
STUNNING ON

Copper & Smoke Grey

74420/05/65

Looking to update the dining table or kitchen island? The JASMINE pendant light fits right in. Designed for indoor use, this hanging lamp comes with 5 integrated LED modules at 4W each, produces light from 2200K to 3300K and is dimmable. The suspension height is adjustable to suit the room. The head is fixed and does not adjust. With a width of 138 cm, a depth of 18 cm and a height of 167 cm, it fits neatly in place. It comes equipped with integrated dimmable LED lamps. Explore the JASMINE and light up your space today.

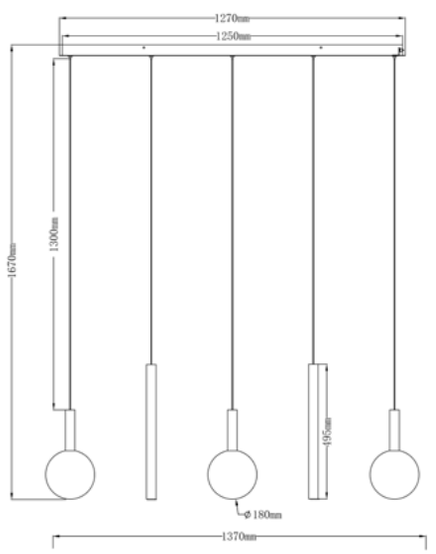

H 167 max. cm - W 138 cm - L 18 cm

Type of lamp:	5x 4W - Integrated LED
Kelvin:	2200 / 2700 / 3300
Lumen:	1800
Material:	Aluminum
Colors available:	Copper
Energy label:	F
Operation:	Light Switch Control
Dimmable:	Yes
CCT operation	CCT - DIP switch - in mounting plate

Copper & Smoke Grey

74420/07/65

Bring understated style to the dining table or kitchen island with the JASMINE pendant light. Designed for indoor use, this hanging lamp comes with 7 integrated LED modules at 4W each, produces light from 2200K to 3300K and is dimmable. The suspension height is adjustable to suit the room. The head is fixed and does not adjust. With a width of 137 cm, a depth of 18 cm and a height of 218 cm, it fits neatly in place. It comes equipped with integrated dimmable LED lamps. Discover the JASMINE today.

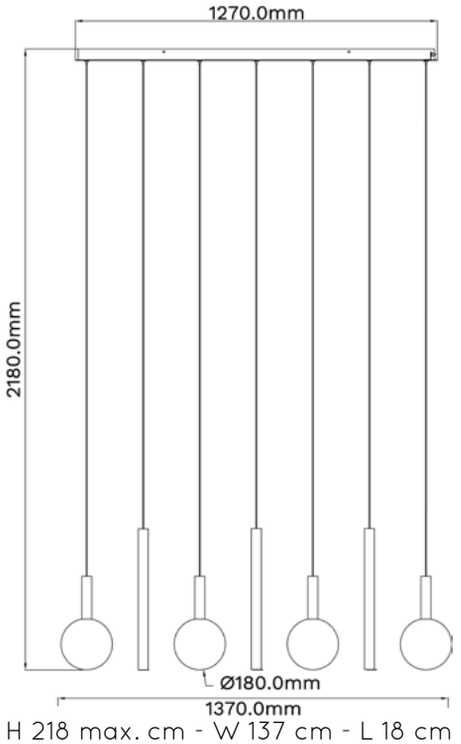

H 218 max. cm - W 137 cm - L 18 cm

Type of lamp:	7x 4W - Integrated LED
Kelvin:	2200 / 2700 / 3300
Lumen:	2520
Material:	Aluminum
Colors available:	Copper
Energy label:	F
Operation:	Light Switch Control
Dimmable:	Yes
CCT operation	CCT - DIP switch - on the product

LUCIDE

Copper & Smoke Grey

74420/14/65

Make a bold statement with the JASMINE pendant light, an eye-catching centrepiece from the Lucide Premium collection. With its striking 140 cm with and smoked glass shades over copper detailing, this hanging lamp brings sculptural elegance to contemporary interiors. The integrated LED lighting (14x4.4W) offers warm white tones from 2200K to 3300K, which are adjustable via a built-in DIP switch for personalized ambiance. With a height range of 100 to 210 cm, this pendant light is adjustable before installation. Ideal for creating luxurious dining room or living room settings with evenly diffused light all around.

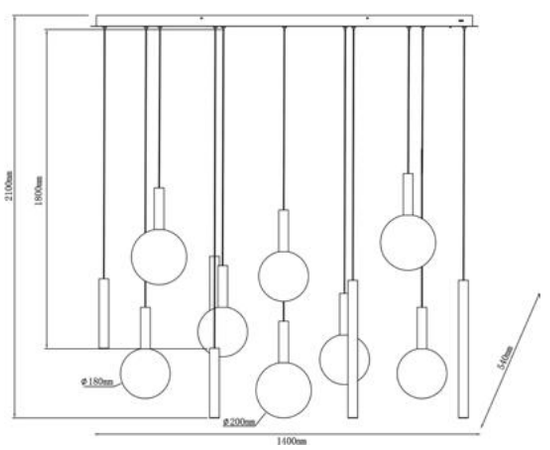

Type of lamp:	14x 4.4W - Integrated LED
Kelvin:	2200 / 2700 / 3300
Lumen:	5040
Material:	Aluminum
Colors available:	Copper
Energy label:	G
Operation:	Light Switch Control
Dimmable:	Yes
CCT operation	CCT - DIP switch - on the product

H 210 max. cm - W 54 cm - L 140 cm

Copper & Smoke Grey

74420/12/65

Make a bold statement with the JASMINE pendant light, an eye-catching centrepiece from the Lucide Premium collection. With its striking 75 cm diameter and smoked glass shades over copper detailing, this hanging lamp brings sculptural elegance to contemporary interiors. The integrated LED lighting (12x4.5W) offers warm white tones from 2200K to 3300K, which are adjustable via a built-in DIP switch for personalized ambiance. With a height range of 100 to 341 cm, this pendant light is adjustable before installation. Ideal for creating luxurious dining room or living room settings with evenly diffused light all around.

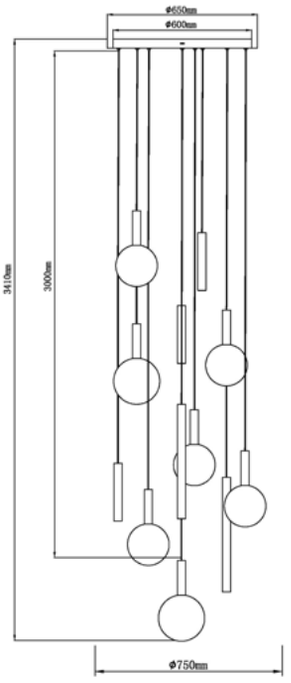

H 341 max. cm - W 75 cm - L 75 cm

Type of lamp:	12x 4.5W - Integrated LED
Kelvin:	2200 / 2700 / 3300
Lumen:	3500
Material:	Aluminum
Colors available:	Copper
Energy label:	G
Operation:	Light Switch Control
Dimmable:	Yes
CCT operation	CCT - DIP switch - on the product

SANTIAGO

Amber & Champagne Color

23401/12/62

Combining clean lines with everyday practicality, the SANTIAGO pendant light suits a wide range of interiors. Inside, it has an integrated LED source up to 16W, from 2700K to 4000K, dimmable. With a width of 32 cm and a height of 180 cm, this pendant light fits seamlessly above a dining table or kitchen island. Like other Lucide pendant lights, its cord is height adjustable, so it can hang at the ideal level. Finished in amber, it blends naturally into a variety of colour schemes and decor styles. Light up your space with the SANTIAGO today.

Type of lamp:	1x 16W - Integrated LED
Kelvin:	2700 / 3300 / 4000
Lumen:	780
Material:	Glass & Aluminum
Colors available:	Amber
Energy label:	G
Operation:	Light Switch Control
Dimmable:	Yes
CCT operation	CCT - DIP switch - on the product

H 180 max. cm - W 32 cm - L 32 cm

Amber & Champagne Color

23401/60/62

Combining clean lines with everyday practicality, the SANTIAGO pendant light suits a wide range of interiors. Inside, it integrated LED sources up to 10W each, from 2700K to 4000K, dimmable. This version holds 5 light points, giving a fuller spread of light over a table or seating area. With a width of 23 cm and a height of 200 cm, this pendant light fits seamlessly above a dining table or kitchen island. Like other Lucide pendant lights, its cord is height adjustable, so it can hang at the ideal level. Light up your space with the SANTIAGO today.

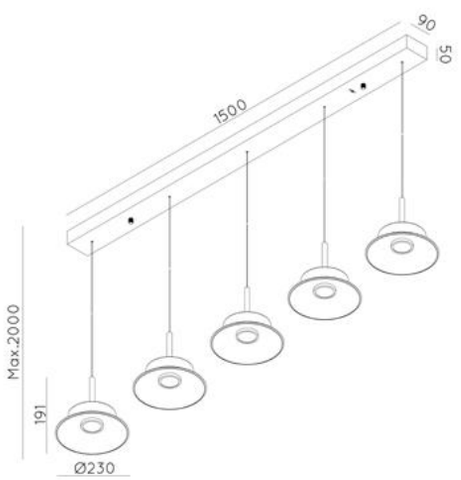

Type of lamp:	5x 10W - Integrated LED
Kelvin:	2700 / 3300 / 4000
Lumen:	2250
Material:	Glass & Aluminum
Colors available:	Amber
Energy label:	G
Operation:	Light Switch Control
Dimmable:	Yes
CCT operation	CCT - DIP switch - on mounting plate

H 200 max. cm - W 23 cm - L 150 cm

Amber & Champagne Color

23201/12/62

With its understated silhouette, the SANTIAGO wall light works as a wall lamp for living rooms, bedrooms, hallways and beyond. Inside, it has an integrated LED source up to 10W, from 2700K to 4000K, dimmable. It measures 23 cm wide and 7.2 cm high, compact enough for any hallway or living space. Like other Lucide wall lights, it ships with a visible cable, ready to mount and connect. Finished in amber, it blends naturally into a variety of colour schemes and decor styles. Bring the SANTIAGO home today.

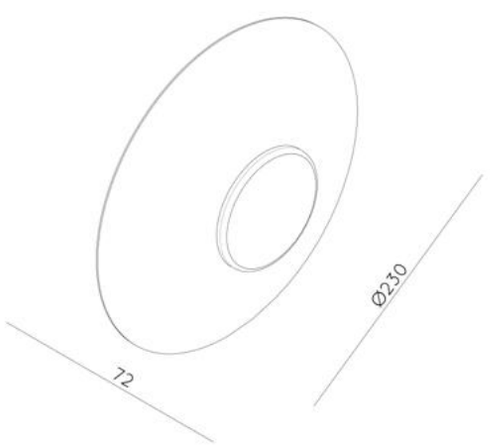

H 7.2 cm - W 23 cm - L 23 cm

Type of lamp:	1x 10W - Integrated LED
Kelvin:	2700 / 3300 / 4000
Lumen:	330
Material:	Glass & Aluminum
Colors available:	Amber
Energy label:	G
Operation:	Light Switch Control
Dimmable:	Yes
CCT operation	CCT - DIP switch - in mounting plate

Amber & Champagne Color

23101/12/62

Combining clean lines with everyday practicality, the SANTIAGO flush ceiling light suits a wide range of interiors. Inside, it has an integrated LED source up to 10W, from 2700K to 4000K, dimmable. With a diameter of 23 cm and a height of 7.3 cm, this ceiling light fits comfortably into most interiors. Finished in amber, it blends naturally into a variety of colour schemes and decor styles. It is a considered addition to the Lucide range, built with everyday use in mind. Light up your space with the SANTIAGO today.

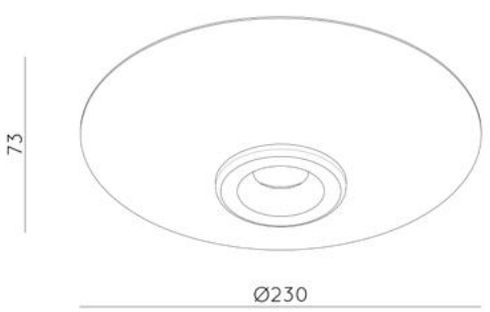

Type of lamp:	1x 10W - Integrated LED
Kelvin:	2700 / 3300 / 4000
Lumen:	550
Material:	Glass & Aluminum
Colors available:	Amber
Energy label:	G
Operation:	Light Switch Control
Dimmable:	Yes
CCT operation	CCT - DIP switch - in mounting plate

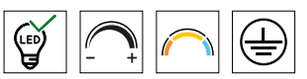

H 7.3 cm - W 23 cm - L 23 cm

MONTANA

Grey iron

68400/75/15

Coffee & Black

68400/75/96

Looking to update the dining table or kitchen island? The MONTANA pendant light fits right in. Designed for indoor use, this hanging lamp comes with 13 integrated LED modules at 5.7W each, produces light from 2700K to 4000K and is dimmable. The suspension height is adjustable to suit the room. The head is fixed and does not adjust. With a width of 20 cm, a depth of 130 cm and a height of 200 cm, it fits neatly in place. It comes equipped with integrated dimmable LED lamps. Explore the MONTANA and light up your space today.

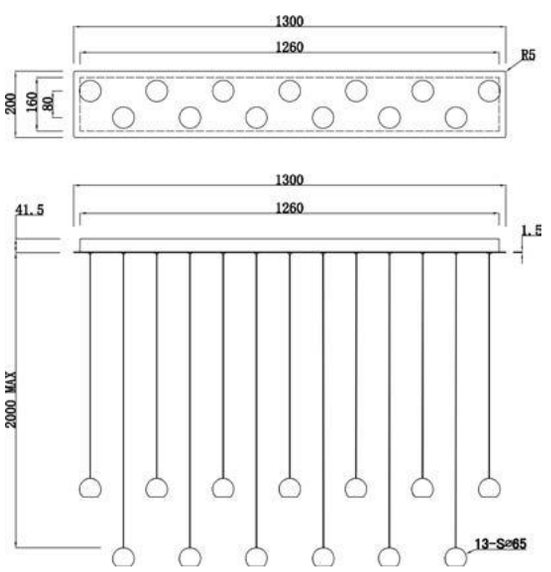

H 200 max. cm - W 20 cm - L 130 cm

Type of lamp:	13x 5.7W - Integrated LED
Kelvin:	2700 / 4000
Lumen:	7410
Material:	Aluminum
Colors available:	Grey iron & Coffee
Energy label:	G
Operation:	Remote Control
Dimmable:	Yes
CCT operation	CCT - Remote control

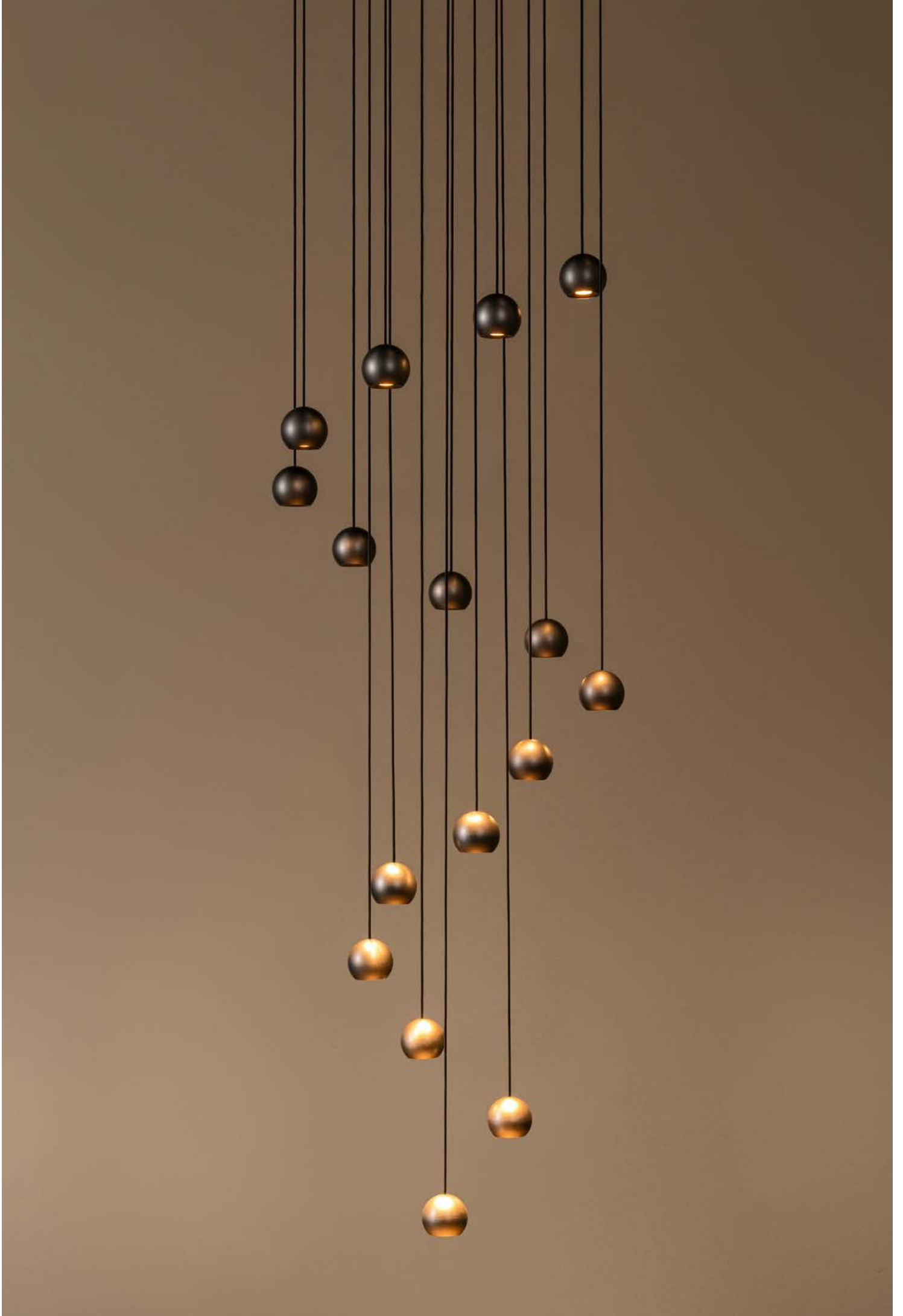

Grey iron

68400/92/15

Coffee & Black

68400/92/96

The MONTANA pendant light adds a considered focal point to the dining table or kitchen island. Designed for indoor use, this hanging lamp comes with 16 integrated LED modules at 5.7W each, produces light from 2700K to 4000K and is dimmable. The suspension height is adjustable to suit the room. The head is fixed and does not adjust. With a width of 55 cm, a depth of 55 cm and a height of 300 cm, it fits neatly in place. It comes equipped with integrated dimmable LED lamps. Light up your space with the MONTANA today.

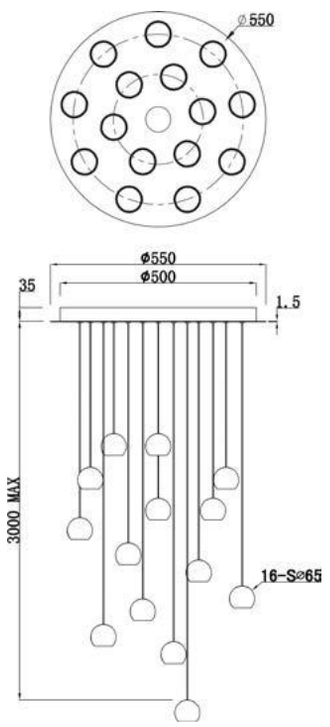

H 300 max. cm - W 55 cm - L 55 cm

Type of lamp:	16x 5.7W - Integrated LED
Kelvin:	2700 / 4000
Lumen:	6240
Material:	Aluminum
Colors available:	Grey iron & Coffee
Energy label:	G
Operation:	Remote Control
Dimmable:	Yes
CCT operation	CCT - Remote control

Grey iron

68500/05/15

Coffee & Black

68500/05/96

Bring understated style to living rooms and bedrooms with the MONTANA table lamp. Designed for indoor use, this table light comes with an integrated LED module at 5W, produces 2700K light and is dimmable. The head rotates and tilts through 360 degrees for precise aiming. With a width of 20.7 cm, a depth of 14 cm and a height of 38.2 cm, it fits neatly in place. It comes equipped with an integrated dimmable LED lamp. Discover the MONTANA today.

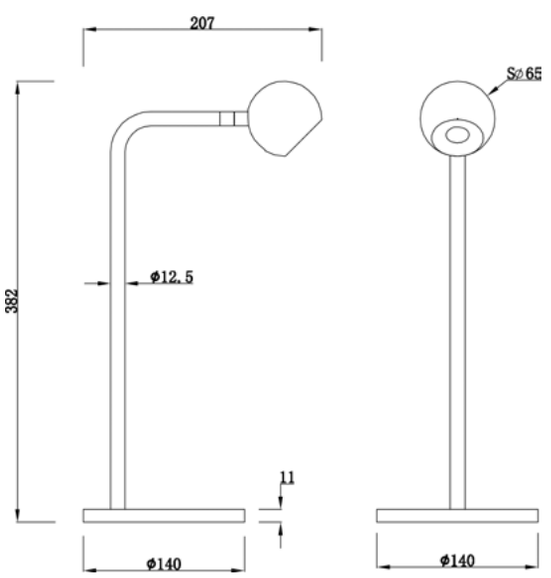

H 38.2 cm - W 20.7 cm - L 14 cm

Type of lamp:	1x 5W - Integrated LED
Kelvin:	2700
Lumen:	390
Material:	Aluminum
Colors available:	Grey iron & Coffee
Energy label:	G
Operation:	Dimmer - In The Cord
Dimmable:	Yes

Grey iron

68700/05/15

Coffee & Black

68700/05/96

Looking to update the living room? The MONTANA floor lamp fits right in. Designed for indoor use, this floor light comes with an integrated LED module at 6.3W, produces 2700K light and is dimmable. The head rotates and tilts through 360 degrees for precise aiming. With a width of 21 cm, a depth of 25.8 cm and a height of 134 cm, it fits neatly in place. It comes equipped with an integrated dimmable LED lamp. Explore the MONTANA and light up your space today.

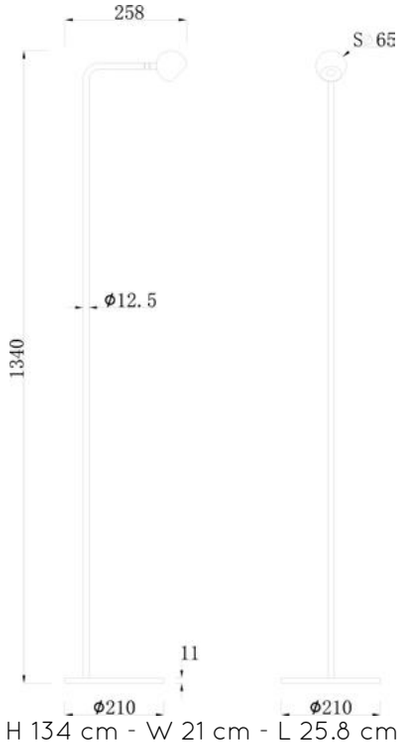

H 134 cm - W 21 cm - L 25.8 cm

Type of lamp:	1x 6.3W - Integrated LED
Kelvin:	2700
Lumen:	415
Material:	Aluminum
Colors available:	Grey iron & Coffee
Energy label:	G
Operation:	Dimmer - In The Cord
Dimmable:	Yes

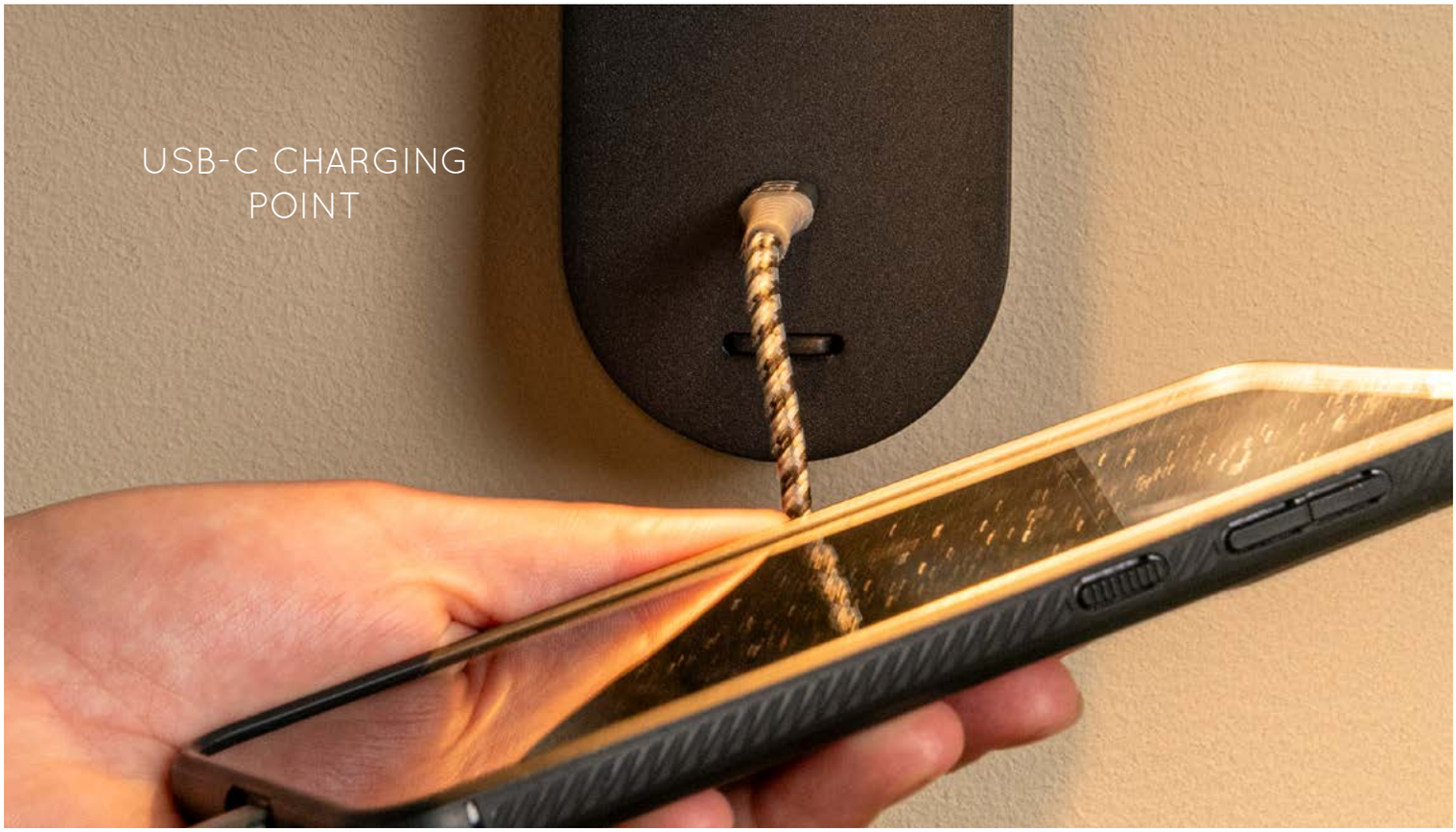
USB-C CHARGING
POINT

Grey iron

68200/06/15

Coffee & Black

68200/06/96

Looking to update hallways and bedrooms? The MONTANA wall light fits right in. Designed for indoor use, this wall lamp comes with an integrated LED module at 6.3W, produces light from 2700K to 4000K and is not dimmable. The head rotates and tilts through 360 degrees for precise aiming. With a width of 6.5 cm, a depth of 11 cm and a height of 18 cm, it fits neatly in place. It ships with a visible cable on the product. It comes equipped with an integrated LED lamp. Explore the MONTANA and light up your space today.

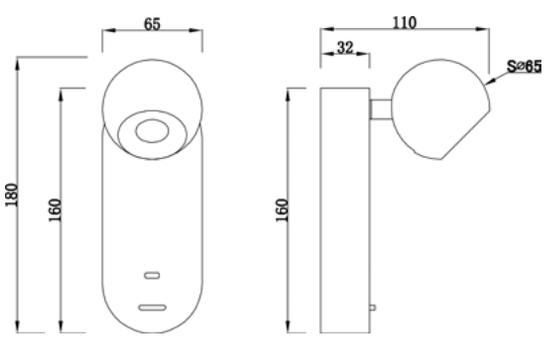

H 18 cm - W 6.5 cm - L 11 cm

Type of lamp:	1x 6.3W - Integrated LED
Kelvin:	2700 / 4000
Lumen:	415
Material:	Aluminum
Colors available:	Grey iron & Coffee
Energy label:	G
Operation:	On/Off Switch - On The Product
Dimmable:	No
CCT operation	CCT - DIP switch - in mounting plate

REPOSITION THE RING
TO YOUR LIKING

APPLAUSE

23400/60/96

INDEX

WITH HANDWAVE
SENSOR

Grey iron

23400/60/15

Coffee

23400/60/96

Industrial finesse meets user-friendly innovation in the APPLAUSE pendant light. Designed with a round aluminum shade in grey iron, this Premium hanging lamp combines design elegance with modern convenience. The integrated 32W LED delivers warm, diffuse light with adjustable color temperature from 2700K to 4000K. Its intuitive hand wave sensor allows effortless dimming, while the easy pulley system lets you adjust the height to suit dining tables, kitchen islands, or workspaces. With a diameter of 60 cm, and a height adjustable between 70 and 173 cm, APPLAUSE adds style, comfort, and functionality in one refined pendant.

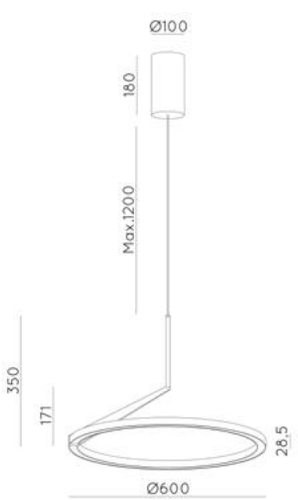

Type of lamp:	1x 32W - Integrated LED
Kelvin:	2700 / 3300 / 4000
Lumen:	1060
Material:	Aluminum
Colors available:	Grey iron & Coffee
Energy label:	G
Operation:	Hand wave sensor
Dimmable:	Yes - hand wave
CCT operation	CCT - Hand wave sensor

H 173 max. cm - W 60 cm - L 60 cm

Grey iron

23400/80/15

Coffee

23400/80/96

Refined proportions and intuitive ease define the APPLAUSE pendant light. With a generous 80 cm diameter and industrial grey iron finish, this Premium hanging lamp brings sculptural impact to modern interiors. The integrated 50W LED delivers diffuse light all around, with adjustable color temperature from 2700K to 4000K. A built-in hand wave sensor enables touch-free dimming, while the height can be easily adjusted using the smart pulley system, ideal for dining areas, workspaces, or large open spaces. With a diameter of 80 cm and a height adjustable from 70 to 176 cm, APPLAUSE offers a perfect balance of design and functionality.

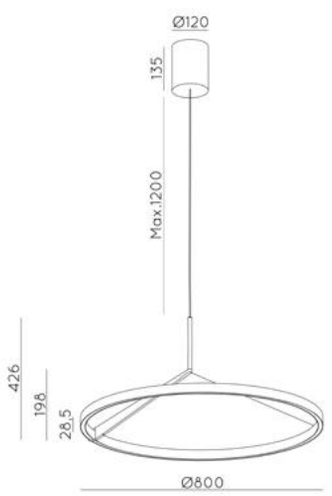

Type of lamp:	1x 50W - Integrated LED
Kelvin:	2700 / 3300 / 4000
Lumen:	1800
Material:	Aluminum
Colors available:	Grey iron & Coffee
Energy label:	G
Operation:	Hand wave sensor
Dimmable:	Yes - hand wave
CCT operation	CCT - Hand wave sensor

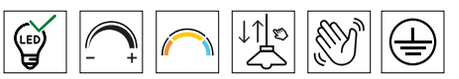

H 176 max. cm - W 80 cm - L 80 cm

Grey iron

23100/40/15

Coffee

23100/40/96

With its understated silhouette, the APPLAUSE flush ceiling light works as a ceiling light for living rooms, bedrooms, hallways and beyond. Inside, it has an integrated LED source up to 26W, from 2200K to 4000K, dimmable. With a diameter of 40 cm and a height of 14.5 cm, this ceiling light fits comfortably into most interiors. It comes fitted with an integrated dimmable LED lamp, a practical touch for daily use. Finished in coffee brown, it blends naturally into a variety of colour schemes and decor styles. Bring the APPLAUSE home today.

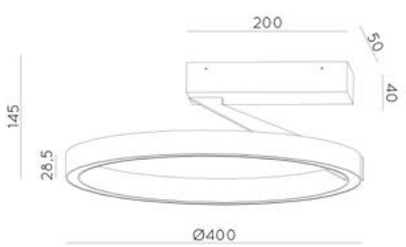

Type of lamp:	1x 26W - Integrated LED
Kelvin:	2200 / 4000
Lumen:	850
Material:	Aluminum
Colors available:	Grey iron & Coffee
Energy label:	G
Operation:	Remote Control
Dimmable:	Yes
CCT operation	CCT - Remote control

H 14.5 cm - W 40 cm - L 40 cm

Grey iron

23100/60/15

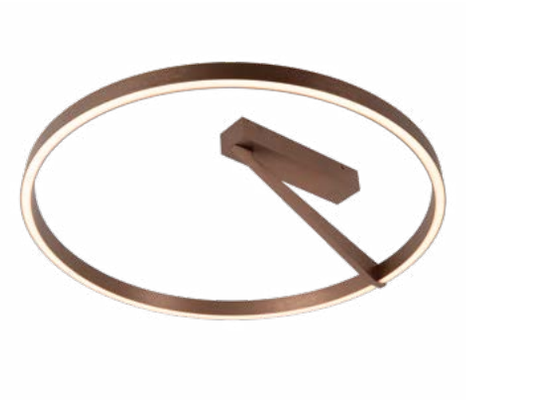

Coffee

23100/60/96

Combining clean lines with everyday practicality, the APPLAUSE flush ceiling light suits a wide range of interiors. Inside, it has an integrated LED source up to 40W, from 2200K to 4000K, dimmable. With a diameter of 60 cm and a height of 19.2 cm, this ceiling light fits comfortably into most interiors. It comes fitted with an integrated dimmable LED lamp, a practical touch for daily use. Finished in coffee brown, it blends naturally into a variety of colour schemes and decor styles. Light up your space with the APPLAUSE today.

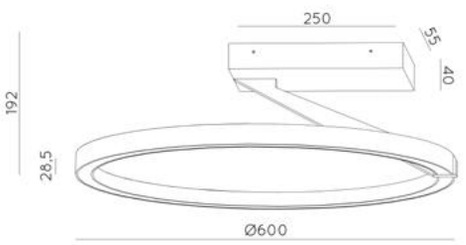

Type of lamp:	1x 40W - Integrated LED
Kelvin:	2200 / 4000
Lumen:	1850
Material:	Aluminum
Colors available:	Grey iron & Coffee
Energy label:	G
Operation:	Remote Control
Dimmable:	Yes
CCT operation	CCT - Remote control

H 19.2 cm - W 60 cm - L 60 cm

TOUCH DIMMER ON
THE PRODUCT

Grey iron

23700/20/15

Coffee

23700/20/96

The APPLAUSE floor lamp adds character to any interior with its considered, contemporary design. Inside, it has an integrated LED source up to 25W, from 2700K to 4000K, dimmable. With a diameter of 33 cm and a height of 180 cm, this floor light fits comfortably into most interiors. It comes fitted with an integrated dimmable LED lamp, a practical touch for daily use. Finished in coffee brown, it blends naturally into a variety of colour schemes and decor styles. Discover the APPLAUSE today.

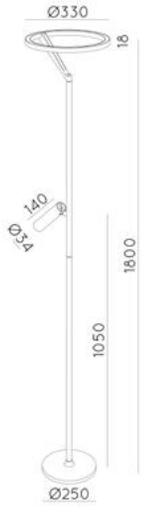

H 180 cm - W 33 cm - L 33 cm

Type of lamp:	1x 25W & 1x 8W - Integrated LED
Kelvin:	2700 / 3300 / 4000
Lumen:	2080
Material:	Aluminum
Colors available:	Grey iron & Coffee
Energy label:	G
Operation:	Touch Dimmer - On The Product
Dimmable:	Yes
CCT operation	CCT - Step touch control - on the product

SARDANA

INDEX

52400/74/02

Matt Gold / Brass

52400/59/02

The SARDANA pendant lamp elevates any interior to the next level. This premium pendant lamp is equipped with an integrated, dimmable 54W LED light source that emits warm white light (2700K). The elegant matte gold design and organic shapes create a modern and luxurious appearance. With a length of 160 cm and an adjustable height up to 210 cm, this lamp offers versatility for any space. Perfect above a dining table or in the living room. Opt for timeless design and top quality.

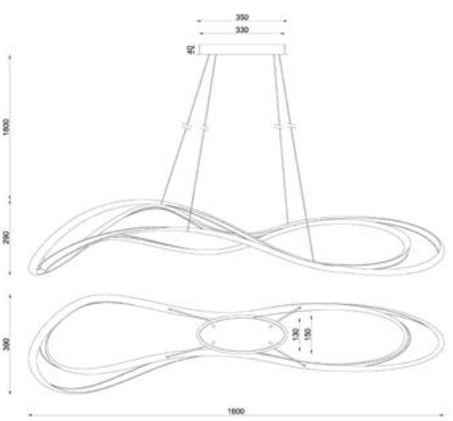

Type of lamp:	1x 54W - Integrated LED
Kelvin:	2700
Lumen:	3500
Material:	Pvc & Metal
Colors available:	Matt Gold / Brass
Energy label:	G
Operation:	Light Switch Control
Dimmable:	Yes

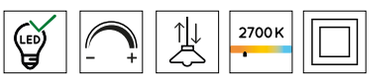

H 210 max. cm - W 39 cm - L 160 cm

Matt Gold / Brass

52400/74/02

The SARDANA pendant light adds a considered focal point to the dining table or kitchen island. Designed for indoor use, this hanging lamp comes with an integrated LED module at 74W, produces 2700K light and is dimmable. The suspension height is adjustable to suit the room. The head is fixed and does not adjust. With a diameter of 80 cm and a height of 180 cm, it fits neatly in place. It comes equipped with an integrated dimmable LED lamp. Light up your space with the SARDANA today.

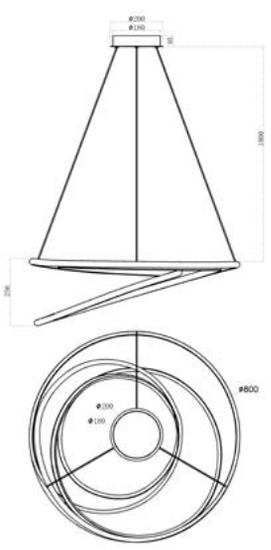

Type of lamp:	1x 74W - Integrated LED
Kelvin:	2700
Lumen:	4700
Material:	Pvc & Metal
Colors available:	Matt Gold / Brass
Energy label:	G
Operation:	Light Switch Control
Dimmable:	Yes

H 180 max. cm - W 80 cm - L 80 cm

Matt Gold / Brass

52700/28/02

Looking for a unique floor lamp? Then Sardana might be able to charm you. Playful light meanders through your space due to an organically designed play of lines. Sardana is fitted with dimmable LED strips. You can easily control the brightness via the dimmer on the cord until you reach the desired mood. Sober and serene mood lighting in your living room or an effective lighting solution at your desk? Whatever you prefer, with Sardana you have the solution at your fingertips.

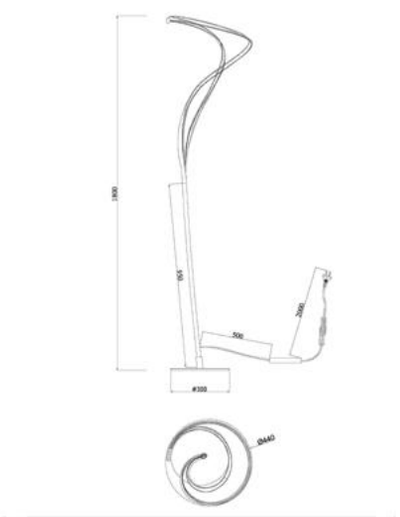

H 180 cm - W 44 cm - L 44 cm

Type of lamp:	1x 28W - Integrated LED
Kelvin:	2700
Lumen:	2000
Material:	Aluminum
Colors available:	Matt Gold / Brass
Energy label:	F
Operation:	Dimmer - In The Cord
Dimmable:	Yes

Matt Gold / Brass

52100/54/02

Bring understated style to hallways and bedrooms with the SARDANA flush ceiling light. Designed for indoor use, this ceiling light comes with an integrated LED module at 54W, produces 2700K light and is dimmable. The head is fixed and does not adjust. It has a diameter of 64 cm and a height of 24 cm. It comes equipped with an integrated dimmable LED lamp. It adds a warm, considered layer of light to daily routines. A calm, considered piece built for everyday use. Discover the SARDANA today.

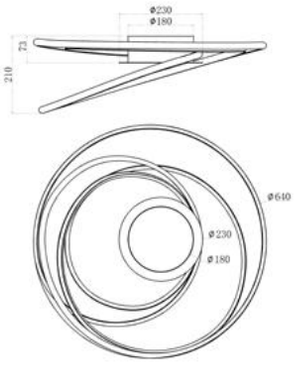

Type of lamp:	1x 54W - Integrated LED
Kelvin:	2700
Lumen:	3600
Material:	Pvc & Metal
Colors available:	Matt Gold / Brass
Energy label:	G
Operation:	Light Switch Control
Dimmable:	Yes

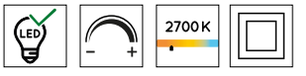

H 24 cm - W 64 cm - L 64 cm

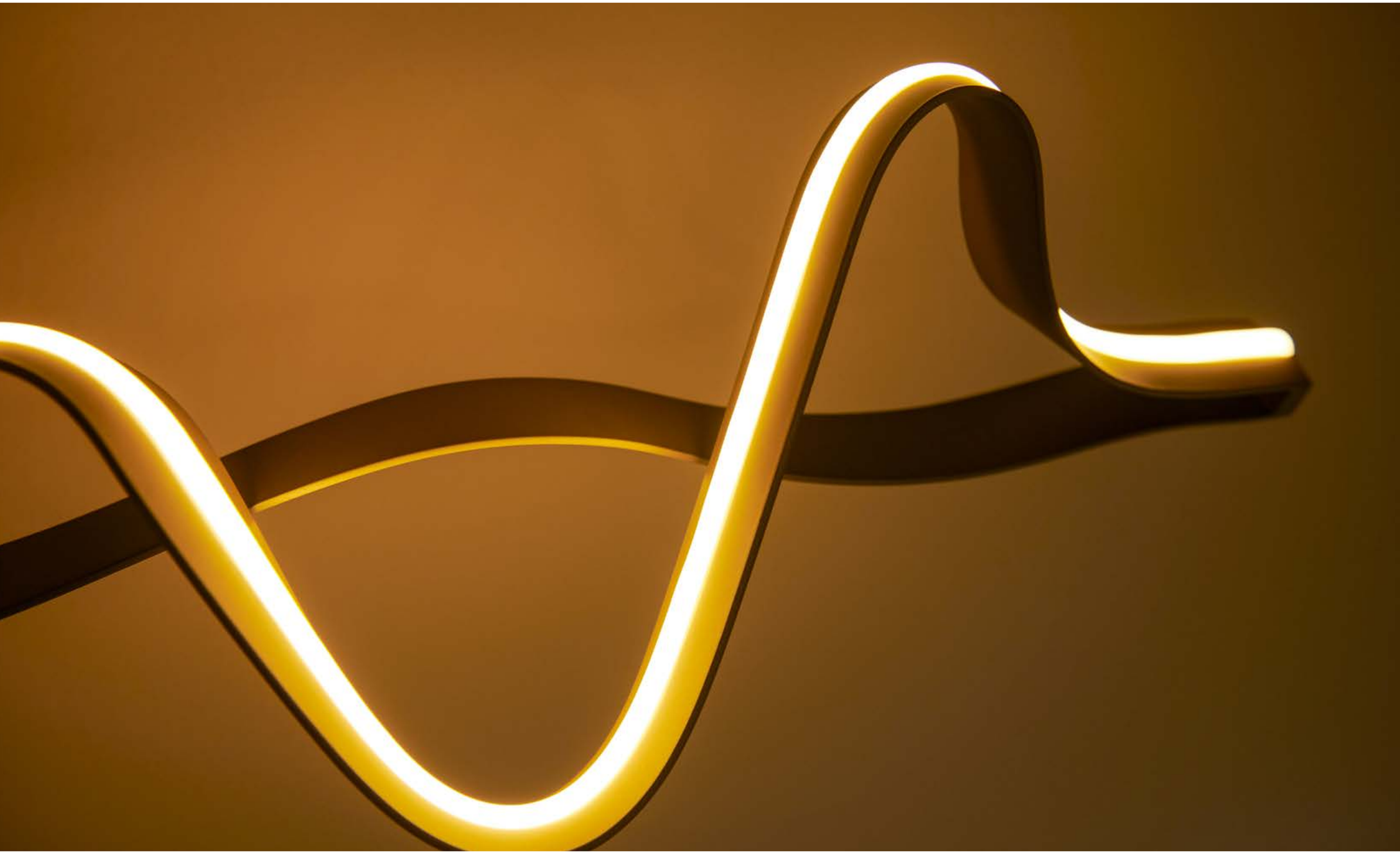

52501/19/05

LAMBADA

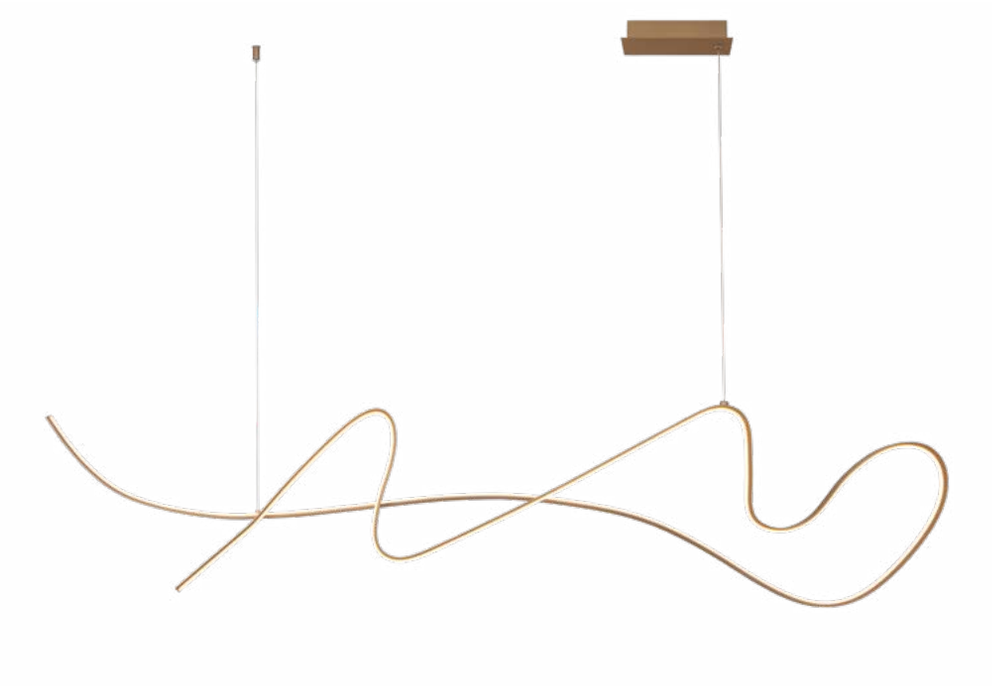

Champagne Color

52401/54/05

Illuminate your indoor space with the LAMBADA pendant light. This premium fixture comes with an integrated dimmable LED, providing a warm white light at 2700K. Its height-adjustable design features a chic champagne finish, perfect for modern interiors. It measures 165 cm in length, 8 cm in width, and 220 cm in height. Add a touch of elegance to your home and discover the charm of the LAMBADA.

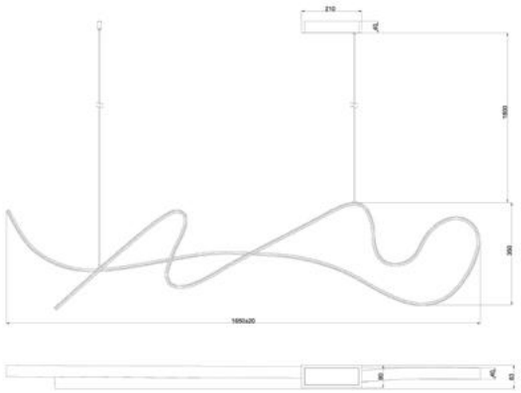

Type of lamp:	1x 47W - Integrated LED
Kelvin:	2700
Lumen:	3700
Material:	Pvc & Metal
Colors available:	Champagne Color & Matt Gold / Brass
Energy label:	F
Operation:	Light Switch Control
Dimmable:	Yes

H 220 max. cm - W 8 cm - L 165 cm

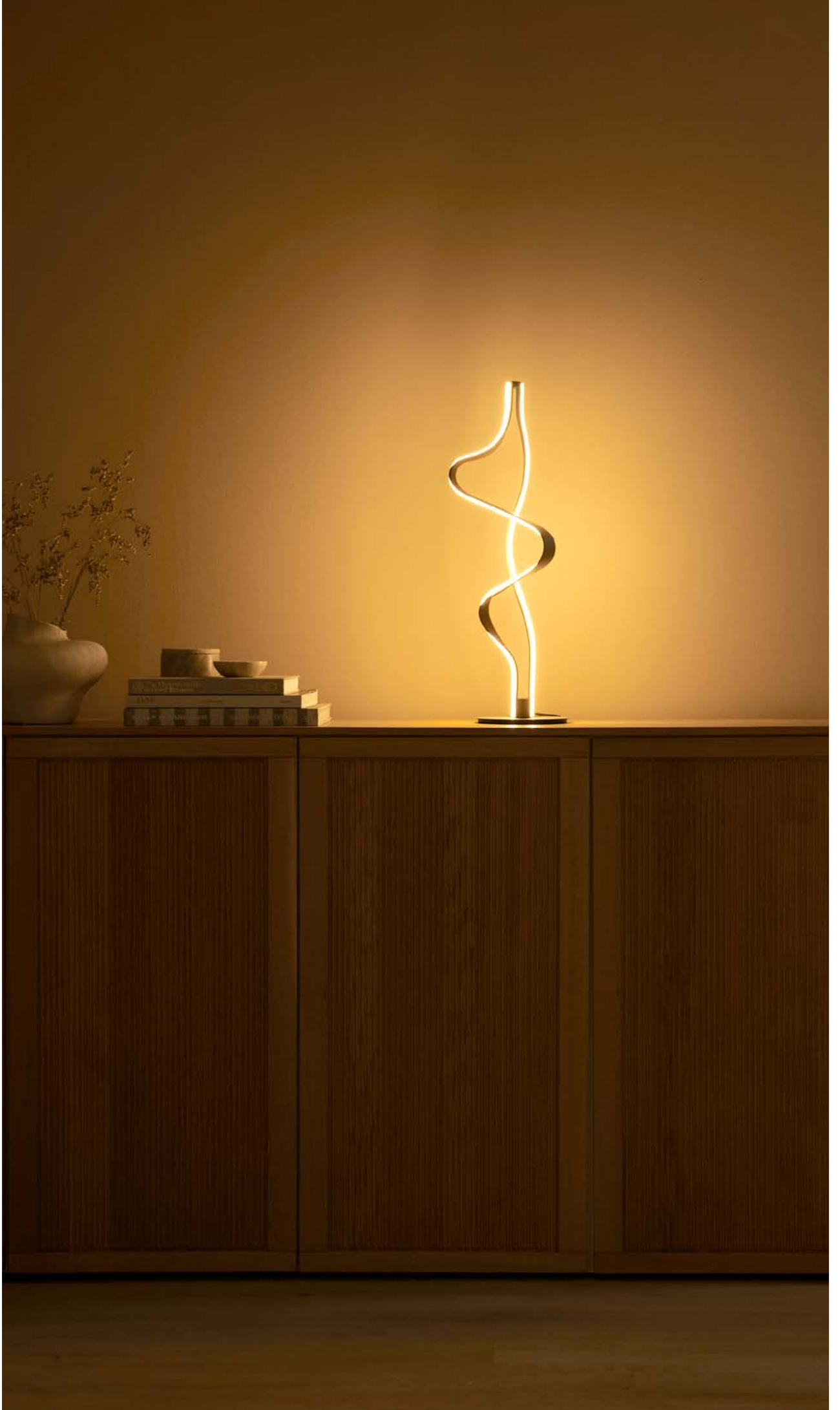

Champagne Color

52501/19/05

A graceful line curves across your table. Lambada is an original table lamp with playful, organic shapes. The table lamp is equipped with an integrated dimmable LED light that emits a warm white glow, easily controlled via the switch. With its stylish design, Lambada brings the perfect light to your desk, sideboard, or bedside table in its own unique, exotic way.

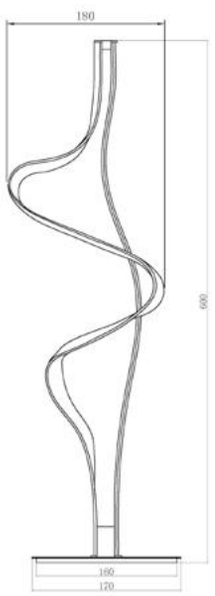

H 60 cm - W 18 cm - L 17 cm

Type of lamp:	1x 19W - Integrated LED
Kelvin:	2700
Lumen:	1750
Material:	Pvc & Metal
Colors available:	Champagne Color & Matt Gold / Brass
Energy label:	F
Operation:	Touch dimmer - In the cord
Dimmable:	Yes

BEAUTIFUL OFF

STUNNING ON

Matt Gold / Brass

52701/38/05

A graceful line winds through your interior. Lambada is an original floor lamp with playful, organic shapes. The floor lamp is equipped with an integrated dimmable LED light that emits a warm white glow, easily controlled via the switch. With its stylish design, Lambada brings the perfect light to your living room, reading nook, or bedroom in its own unique, exotic way.

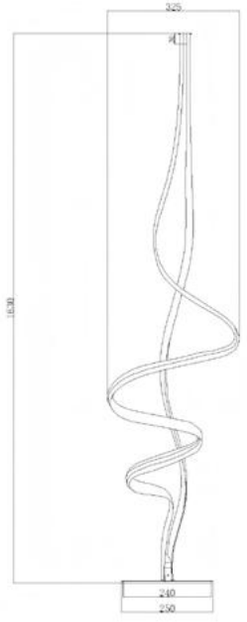

H 163 cm - W 32.5 cm - L 20 cm

Type of lamp:	1x 38W - Integrated LED
Kelvin:	2700
Lumen:	3580
Material:	Pvc & Metal
Colors available:	Champagne Color & Matt Gold / Brass
Energy label:	F
Operation:	Dimmer - In The Cord
Dimmable:	Yes

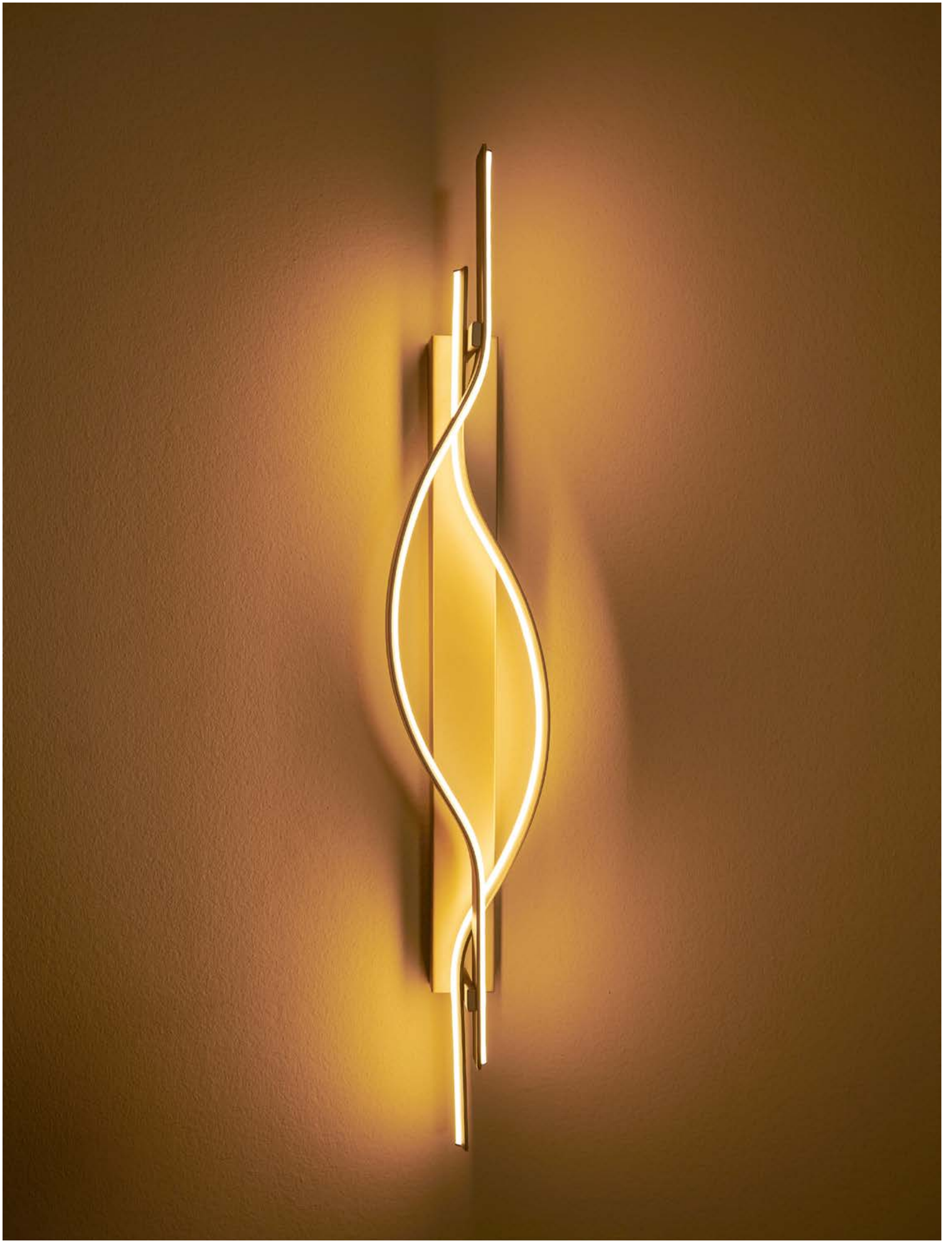

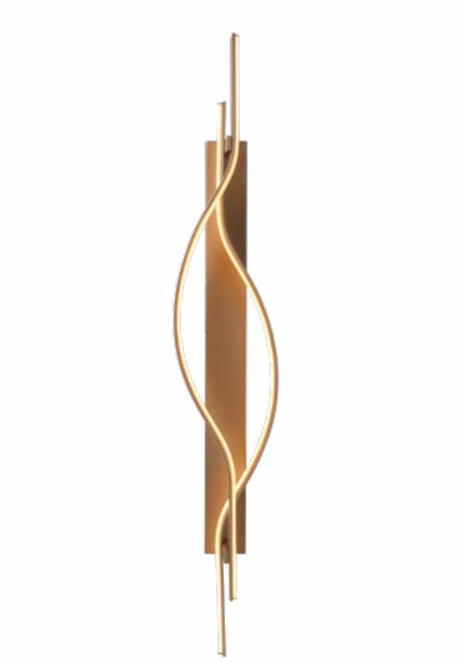

Champagne Color

52201/18/05

The LAMBADA wall light adds a considered focal point to hallways and bedrooms. Designed for indoor use, this wall lamp comes with an integrated LED module at 20W, produces 2700K light and is dimmable. The head is fixed and does not adjust. With a width of 12.5 cm, a depth of 14 cm and a height of 80.5 cm, it fits neatly in place. It ships with a visible cable on the product. It comes equipped with an integrated dimmable LED lamp. Light up your space with the LAMBADA today.

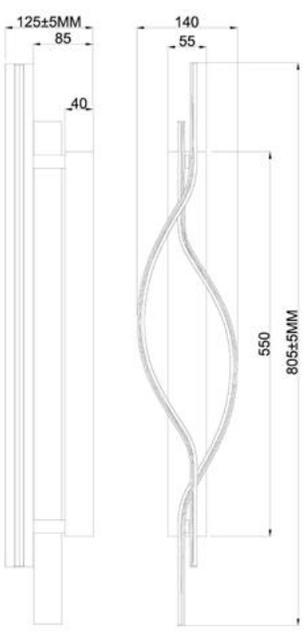

H 80.5 cm - W 12.5 cm - L 14 cm

Type of lamp:	1x 20W - Integrated LED
Kelvin:	2700
Lumen:	1570
Material:	Pvc & Aluminum
Colors available:	Champagne Color & Matt Gold / Brass
Energy label:	G
Operation:	Light Switch Control
Dimmable:	Yes

MENUET

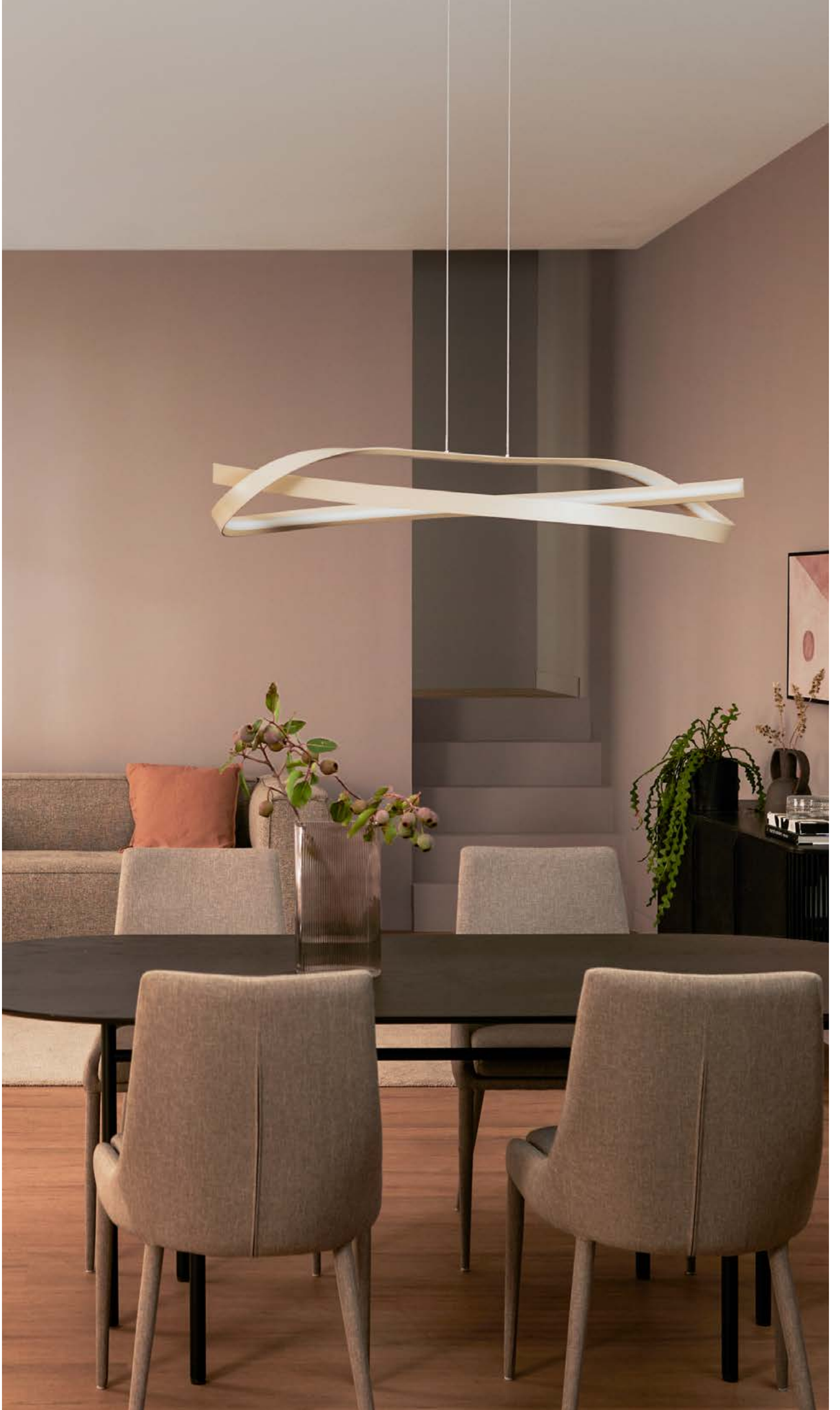

Taupe

46424/50/41

Illuminate your living space with the MENUET pendant light. Crafted from high-quality aluminum and boasting a modern taupe finish, this fixture is perfect for any indoor setting. It features an integrated dimmable LED light, adjustable color temperature (2200K-3000K) via DIP switch, and height flexibility before installation. With dimensions of 110 cm in length, 36 cm in width, and 150 cm in height, it complements various interiors. Enjoy the energy efficiency of 1x46W and the convenience of dimming compatibility. Elevate your decor with this elegant addition. Order now and transform your space!

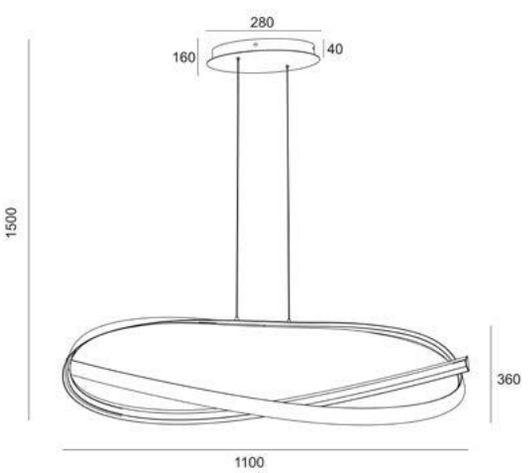

Type of lamp:	1x 46W - Integrated LED
Kelvin:	2200 / 2700 / 3000
Lumen:	2500
Material:	Aluminum
Colors available:	Taupe
Energy label:	G
Operation:	Light Switch Control
Dimmable:	Yes
CCT operation	CCT - DIP switch - on mounting plate

H 150 max. cm - W 36 cm - L 110 cm

Taupe

46424/60/41

Enhance your home decor with the MENUET Pendant Light. This premium pendant light is designed with high-quality aluminum and a sleek taupe finish, perfect for modern interiors. Featuring an integrated dimmable LED light source, it allows for adjustable color temperature (2200K,2700K,3000K) via a convenient DIP switch. With dimensions of 140 cm in length, 36 cm in width, and 150 cm in height, it offers both style and functionality. Upgrade your lighting today and create an inviting atmosphere!

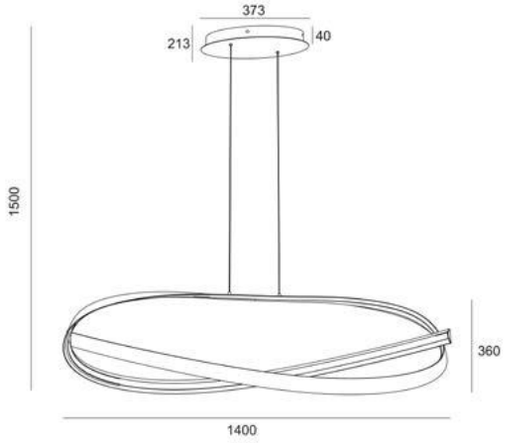

Type of lamp:	1x 58W - Integrated LED
Kelvin:	2200 / 2700 / 3000
Lumen:	3200
Material:	Aluminum
Colors available:	Taupe
Energy label:	G
Operation:	Light Switch Control
Dimmable:	Yes
CCT operation	CCT - DIP switch - on mounting plate

H 150 max. cm - W 36 cm - L 140 cm

BEAUTIFUL OFF

STUNNING ON

Taupe

46124/50/41

Combining clean lines with everyday practicality, the MENUET flush ceiling light suits a wide range of interiors. Inside, it has an integrated LED source up to 50W, from 2200K to 3000K, dimmable. With a diameter of 60 cm and a height of 24 cm, this ceiling light fits comfortably into most interiors. It comes fitted with an integrated dimmable LED lamp, a practical touch for daily use. Finished in taupe, it blends naturally into a variety of colour schemes and decor styles. Light up your space with the MENUET today.

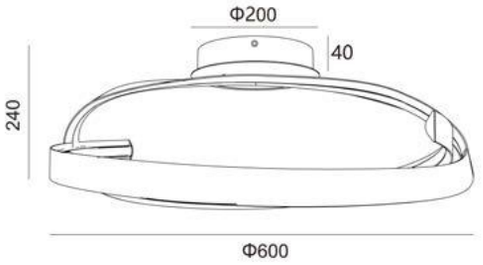

Type of lamp:	1x 46W - Integrated LED
Kelvin:	2200 / 2700 / 3000
Lumen:	2700
Material:	Aluminum
Colors available:	Taupe
Energy label:	G
Operation:	Light Switch Control
Dimmable:	Yes
CCT operation	CCT - DIP switch - on mounting plate

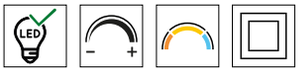

H 24 cm - W 60 cm - L 60 cm

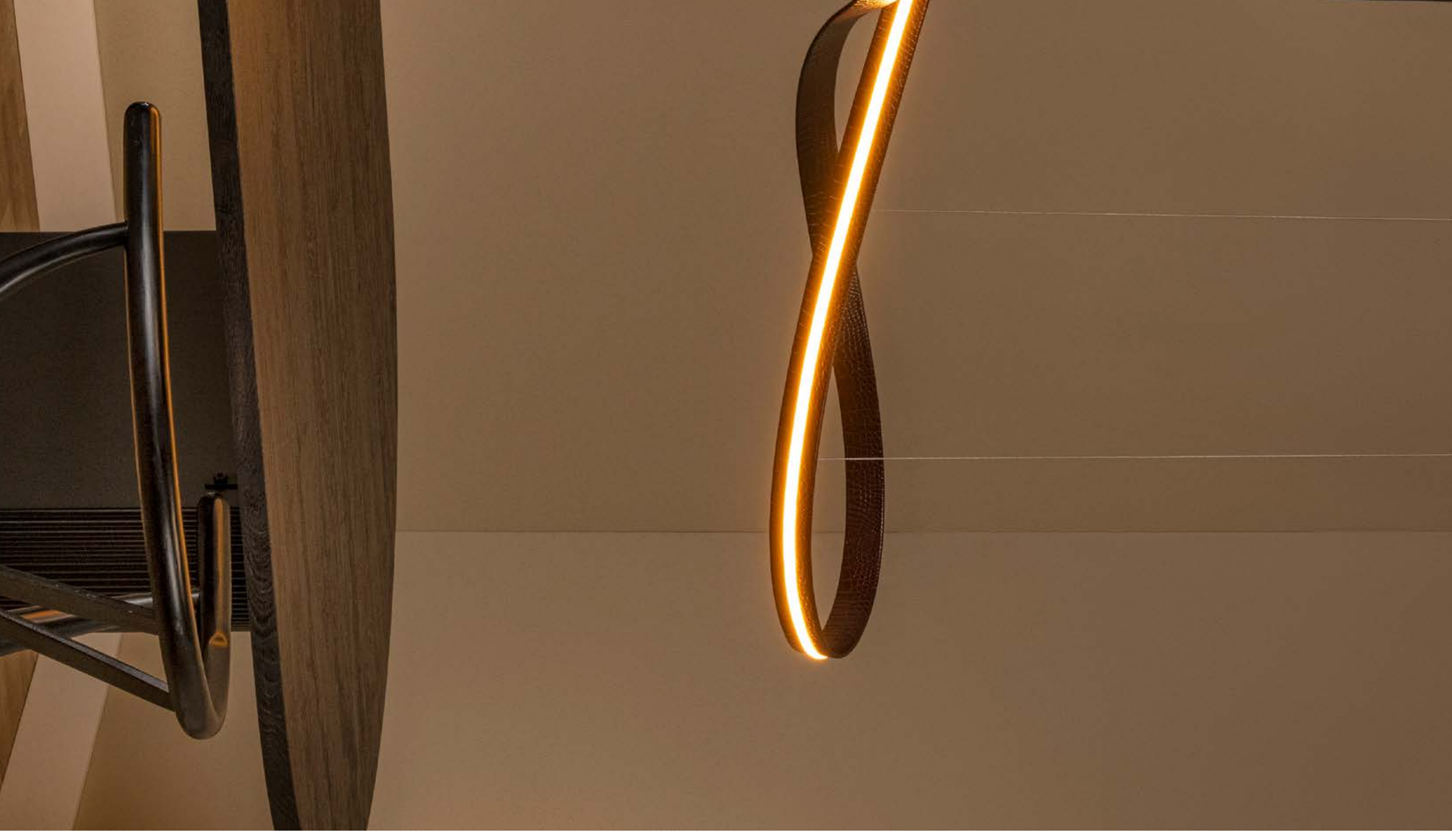

13493/68/96

SLALOM

13493/68/38

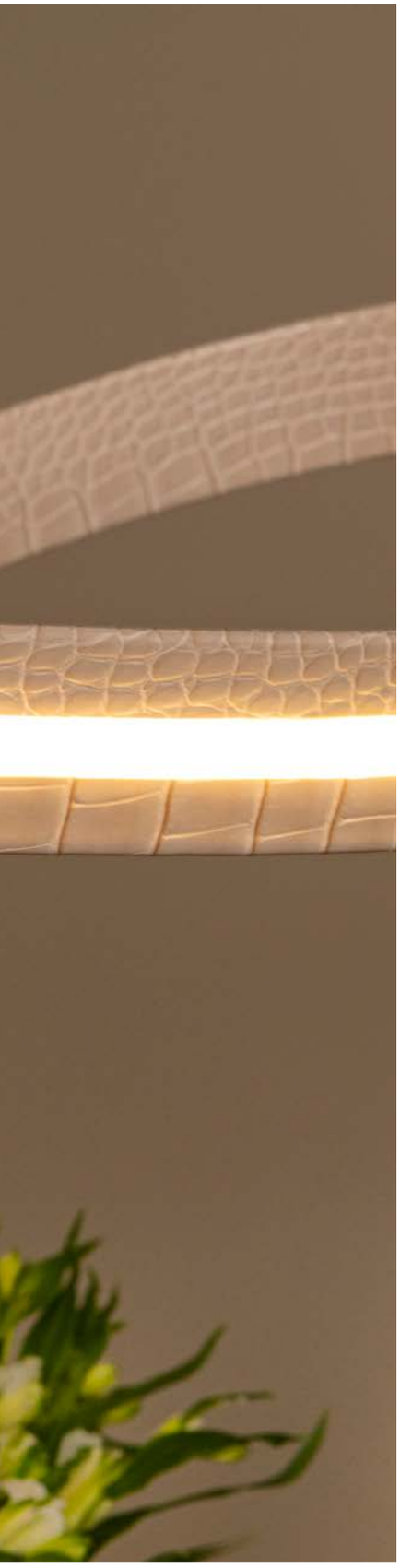

Cream & Matt Gold / Brass

13493/68/38

Coffee & Matt Gold / Brass

13493/68/96

With its understated silhouette, the SLALOM pendant light works as a pendant lamp for living rooms, bedrooms, hallways and beyond. Inside, it has an integrated LED source up to 80W, from 2200K to 4000K, dimmable. With a width of 61 cm and a max. height of 181.5 cm, this pendant light fits seamlessly above a dining table or kitchen island. Like other Lucide pendant lights, its cord is height adjustable, so it can hang at the ideal level. It comes fitted with an integrated dimmable LED lamp, a practical touch for daily use. Bring the SLALOM home today.

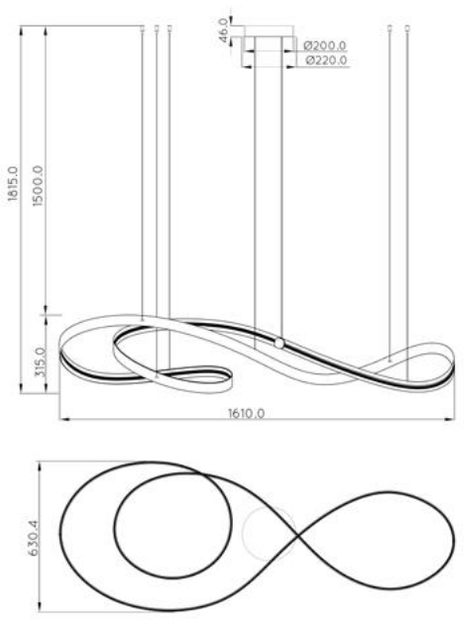

H 181.5 max. cm - W 63 cm - L 161 cm

Type of lamp:	1x 80W - Integrated LED
Kelvin:	2200 / 4000
Lumen:	1850
Material:	Aluminum, Metal & leather
Colors available:	Cream & Coffee
Energy label:	G
Operation:	Remote control
Dimmable:	Yes - remote control
CCT operation	CCT - Remote control

ADJUST THE WIRES TO YOUR LIKING AND
CREATE DIFFERENT CONSTELLATIONS

46403/92/02

VIDAL

INDEX

premiu
BY

Matt Gold / Brass & Opal

46403/99/02

Black & Opal

46403/99/30

The perfect combination for a successful dinner? Good company, good food and drinks and the Vidal pendant lamp of course. The open, ring-shaped chandelier hangs from a round head on the ceiling with three fine cables. The extremely warm light is the optimal partner at the table, and you can also easily connect Vidal to an external dimmer. Adjust the height of this pendant lamp to a maximum of 200 centimetres, and your dining table will always have the desired mood lighting. Bring on the visitors.

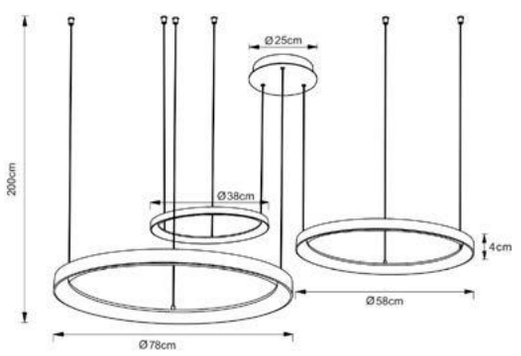

Type of lamp:	1x 120W - Integrated LED
Kelvin:	2700
Lumen:	5080
Material:	Acrylic & Metal
Colors available:	Matt Gold / Brass & Black
Energy label:	G
Operation:	Light Switch Control
Dimmable:	Yes

H 200 max. cm - W 136 cm - L 78 cm

Matt Gold / Brass & Opal

46403/92/02

Black & Opal

46403/92/30

The perfect combination for a successful dinner? Good company, good food and drinks and the Vidal pendant lamp of course. The open, ring-shaped chandelier hangs from a round head on the ceiling with three fine cables. The extremely warm light is the optimal partner at the table, and you can also easily connect Vidal to an external dimmer. Adjust the height of this pendant lamp to a maximum of 200 centimetres, and your dining table will always have the desired mood lighting. Bring on the visitors.

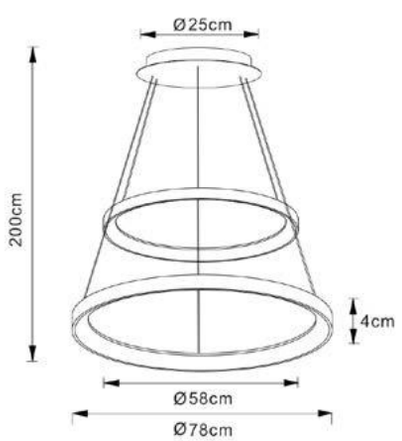

Type of lamp:	1x 92W - Integrated LED
Kelvin:	2700
Lumen:	4160
Material:	Acrylic & Metal
Colors available:	Matt Gold / Brass & Black
Energy label:	G
Operation:	Light Switch Control
Dimmable:	Yes

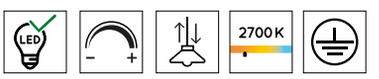

H 200 max. cm - W 78 cm - L 78 cm

BRAGA

INDEX

2347 2/ 36/96

SLEEK ALUMINUM DESIGN

Coffee

23472/36/96

Add a touch of luxury to your interior with the Lucide BRAGA pendant lamp from the Premium collection. This modern and stylish pendant lamp is made of high-quality aluminum and features an elegant coffee brown finish. With its sleek rectangular design and integrated LED lighting, BRAGA offers a subtle yet impressive light source for dining rooms, kitchens, or living spaces. Thanks to the handwave sensor, adjustable color temperature (2700K-4000K), and dimming function. With a length of 150 cm, a width of 5 cm, and a height of 207.9 cm, this pendant lamp fits perfectly above a dining table or kitchen island.

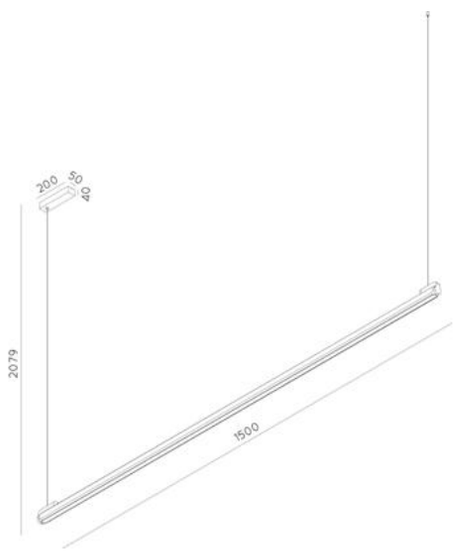

Type of lamp:	1x 36W - Integrated LED
Kelvin:	2700 / 4000
Lumen:	2450
Material:	Aluminum
Colors available:	Coffee
Energy label:	G
Operation:	Hand wave sensor
Dimmable:	Yes - hand wave
CCT operation	CCT - Step touch control - on the product

H 207.9 max. cm - W 5 cm - L 150 cm

Coffee & Black

23273/01/96

Looking for classy wall lighting that performs exceptionally? With this premium Braga wall lamp, you can create a luxurious atmosphere in your home in no time. The sleek design of this angular wall lamp is an immediate winner. Braga is made of high-quality aluminium, fitted with a bulb that emits warm, white light, and is easy to connect to a dimmer if desired. Subtle but extremely efficient, Braga spreads a pleasant light in the room. Whether it's for your living room, bedroom or workspace, Braga is always a good choice.

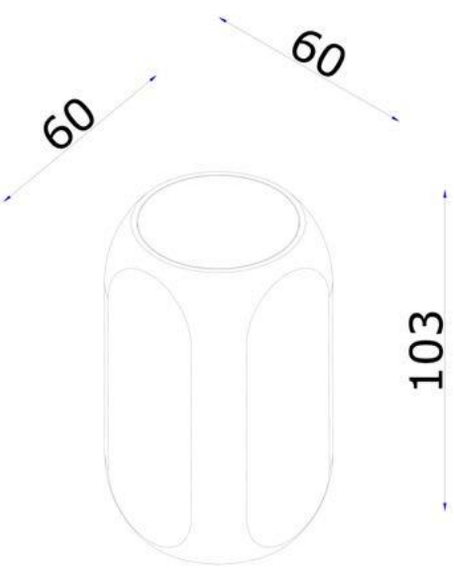

H 10.3 cm - W 6 cm - L 6 cm

Type of lamp:	1x 5W - GU10 (MR16)
Material:	Aluminum
Colors available:	Coffee
Operation:	Light Switch Control
Recom. bulb:	1x 49009/05/30
Dimmable:	Yes

Coffee & Black

23173/01/96

Looking for classy ceiling lighting that performs exceptionally? With this premium Braga ceiling lamp, you can create a warm, luxurious atmosphere in your home in no time. The sleek design of this elegant, angular ceiling lamp is an immediate winner. Braga is made of high-quality aluminium and easy to connect to a dimmer if desired. The downlight creates an even, pleasant illumination throughout the room. Whether it's for your living room, bedroom or workspace, Braga is always a good choice.

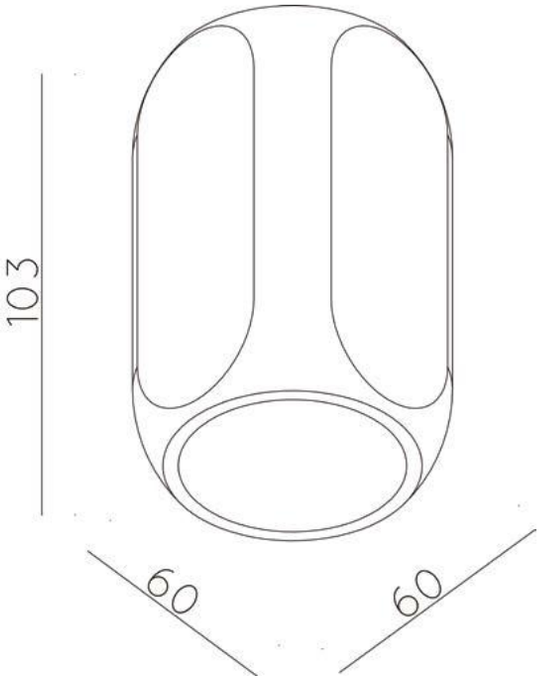

H 10.3 cm - W 6 cm - L 6 cm

Type of lamp:	1x 5W - GU10 (MR16)
Material:	Aluminum
Colors available:	Coffee
Operation:	Light Switch Control
Recom. bulb:	1x 49009/05/30
Dimmable:	Yes

Coffee & Black

23272/11/96

Looking for classy wall lighting that performs exceptionally? With this premium Braga wall lamp, you can create a luxurious atmosphere in your home in no time. The sleek design of this sophisticated wall lamp is an immediate winner. Braga is made of high-quality aluminium, fitted with a led strip that emits warm, white light. Subtle but extremely efficient, Braga spreads a pleasant light in the room. Whether it's for your living room, bedroom or workspace, Braga is always a good choice.

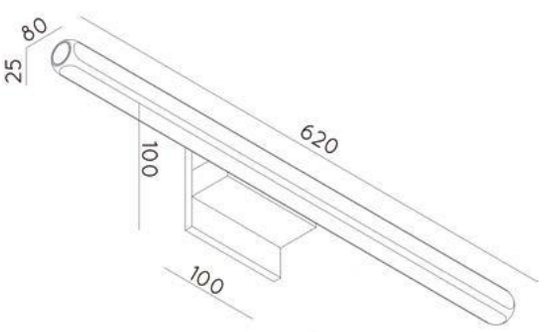

Type of lamp:	1x 10 W - Integrated LED
Kelvin:	2700
Lumen:	180
Material:	Aluminum
Colors available:	Coffee
Energy label:	G
Operation:	Light Switch Control

H 62 cm - W 8 cm - L 10 cm

WITH TOUCH DIMMER

2377 2/11/96

Coffee

23772/18/96

Add a touch of luxury to your interior with the Lucide BRAGA floor lamp from the Premium collection. This modern and stylish floor lamp is made of high-quality aluminum and features an elegant coffee brown finish. With its sleek cylindrical design and integrated LED lighting, BRAGA offers a subtle yet impressive light source for living rooms, offices, or reading corners. Thanks to touch control, adjustable color temperature (2700K-4000K), and dimming function, you can effortlessly adjust the light intensity and color temperature with a simple motion, creating the perfect ambiance from warm white to bright task lighting.

H 155 cm - W 29.7 cm - L 29.7 cm

Type of lamp:	1x 22W - Integrated LED
Kelvin:	2700 / 4000
Lumen:	1000
Material:	Aluminum
Colors available:	Coffee
Energy label:	G
Operation:	Touch Dimmer - On The Product
Dimmable:	Yes
CCT operation	CCT - Step touch control - on the product

GRIFFITH

Bronze

24703/17/04

Subtle, elegant and versatile. Those are Griffith's sublime assets. This standing lamp made of high-quality aluminium has numerous other strengths, in addition to an eye-catching design. You can easily operate the integrated dimmable LED bulb with warm, white light via the handy touch sensor on the lamp. Setting the mood with light has never been so easy. Want to light up your space stylishly and functionally? Then count on Griffith. We bet she won't disappoint.

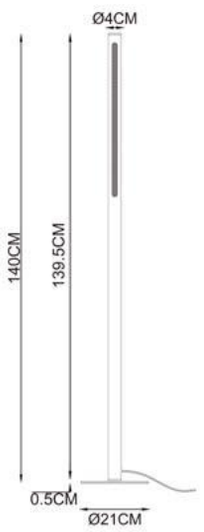

H 140 cm - W 21 cm - L 21 cm

Type of lamp:	1x 18W - Integrated LED
Kelvin:	2700 / 3300 / 4000
Lumen:	400
Material:	Aluminum
Colors available:	Bronze
Energy label:	G
Operation:	Touch Dimmer - On The Product
Dimmable:	Yes
CCT operation	CCT - Step touch control - on the product

Bronze

24403/42/04

People who love elegance and style are guaranteed to fall for Griffith's charms. This sleekly designed pendant lamp made of high-quality aluminium not only has an eye-catching design, its versatility and ease of use are two more great assets. The pendant lamp consists of 6 pendants, and the light color can be adjusted in the ceiling plate at the top. In addition, all the pendants are adjustable in height for installation. This lets you give Griffith exactly the look you prefer. Stylish, user-friendly and effective? That's our Griffith.

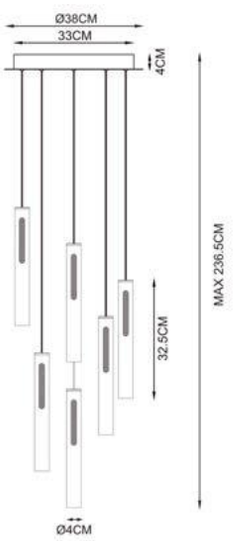

Type of lamp:	6x 6W - Integrated LED
Kelvin:	2700 / 3300 / 4000
Lumen:	1050
Material:	Aluminum
Colors available:	Bronze
Energy label:	E
Operation:	Light Switch Control
Dimmable:	Yes
CCT operation	CCT - DIP switch - in mounting plate

H 236.5 max. cm - W 38 cm - L 38 cm

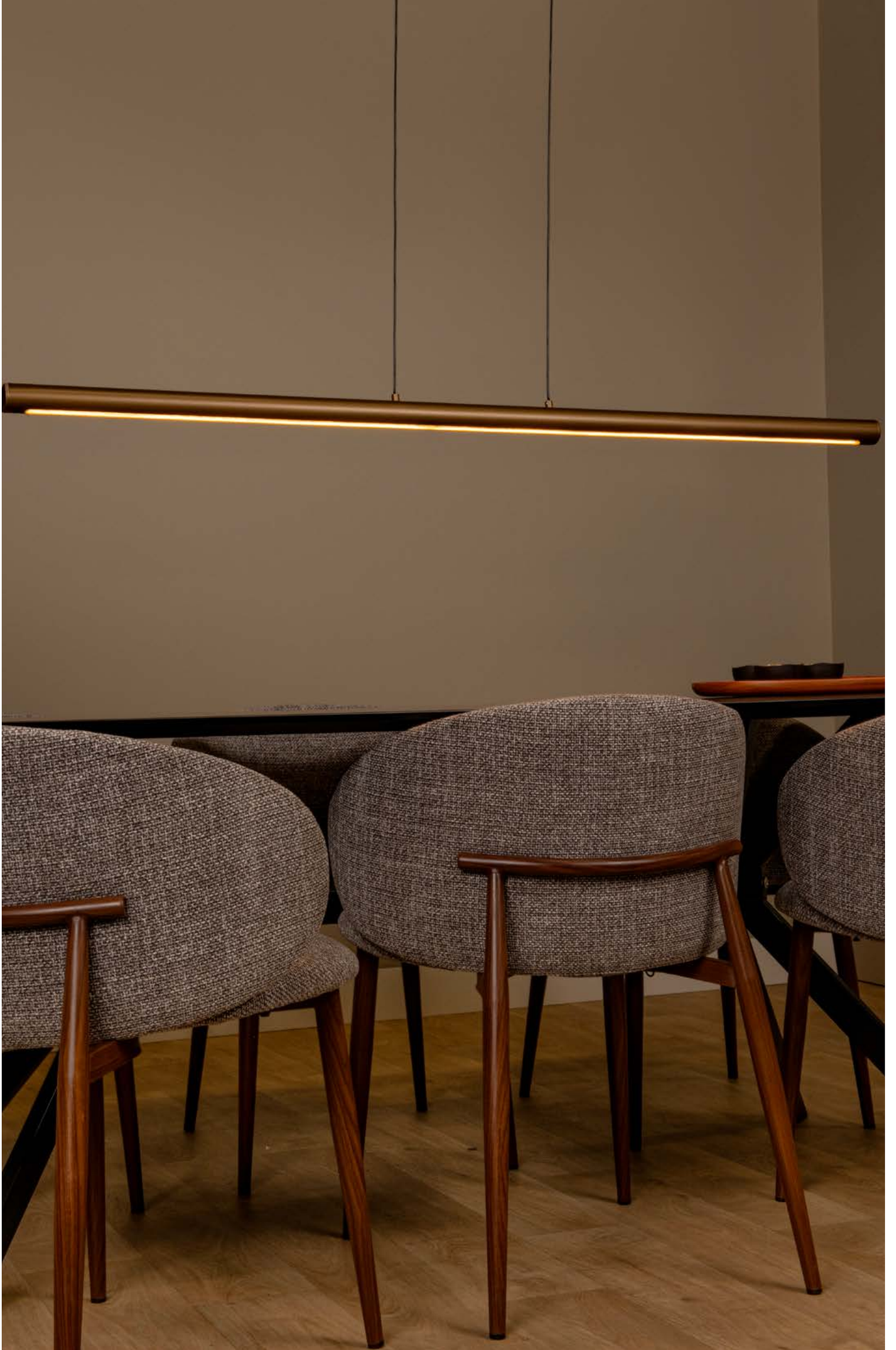

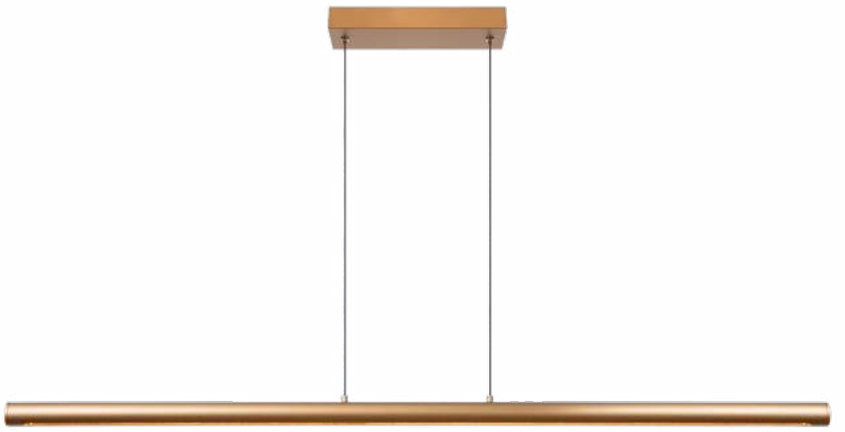

Bronze

24403/36/04

People who love elegance and style are guaranteed to fall for Griffith's charms. This sleekly designed pendant lamp made of high-quality aluminium not only has an eye-catching design, its versatility and ease of use are two more great assets. The tubular pendant lamp carries an integrated, dimmable LED bulb that you can easily operate via a touch sensor on the lamp. In addition, Griffith is adjustable in height for installation. This allows you to install the hanging lamp efficiently at the desired height. This product must not be connected to a wall switch and can only be operated using the controls on the product itself.

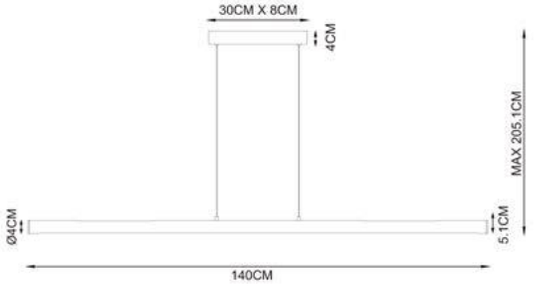

Type of lamp:	1x 33W - Integrated LED
Kelvin:	2700 / 4000
Lumen:	470
Material:	Aluminum
Colors available:	Bronze
Energy label:	G
Operation:	Touch Dimmer - On The Product
Dimmable:	Yes
CCT operation	CCT - Touch switch - in mounting plate

H 205.1 max. cm - W 8 cm - L 140 cm

MARNIK

41 40 5/ 24/ 30

Black & Gold

41405/24/30

Bring a sleek and refined design into your interior with the Lucide Premium MARNIK pendant lamp. With a slim profile of Ø2.5 cm and a length of 150 cm, this modern cylindrical pendant lamp adds a subtle yet luxurious touch to any space. Thanks to the dimmable integrated LED (22W, 2700K-4000K), you can easily adjust the light temperature via the hand wave sensor on the product. The height is adjustable before installation, ensuring a perfect fit for your interior. Made of high-quality aluminum with a powder-coated finish in stylish black with gold accents, MARNIK seamlessly integrates into modern interiors.

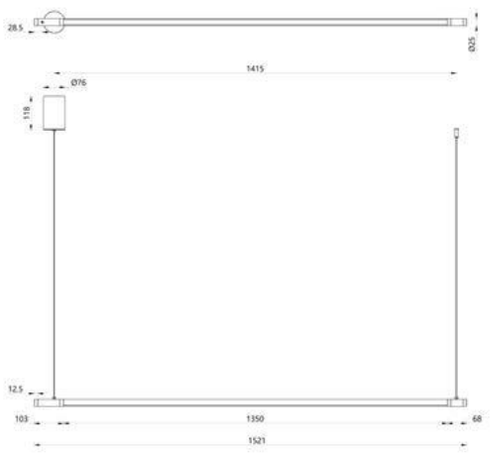

Type of lamp:	1x 22W - Integrated LED
Kelvin:	2700 / 3300 / 4000
Lumen:	750
Material:	Aluminum
Colors available:	Black
Energy label:	G
Operation:	Hand wave sensor
Dimmable:	Yes - hand wave
CCT operation	CCT - Hand wave sensor

H 160 max. cm - W 2.5 cm - L 152.1 cm

Black & Gold

41405/32/30

Bring refined luxury into your interior with the Lucide Premium MARNIK pendant lamp. This modern pendant lamp combines sleek design with smart technology, making it both functional and elegant. The integrated 24W LED light source provides dimmable warm white light (2700K-4000K), easily adjustable via the convenient hand motion sensor. Thanks to the height-adjustable cable, you can effortlessly adapt the MARNIK to your space. With a diameter of 2.5 cm and a maximum height of 160 cm, this cylindrical lamp is perfect above a dining table or as stylish accent lighting. Made of high-quality aluminum and finished in matte black with a gold detail, the pendant lamp fits seamlessly into a modern interior.

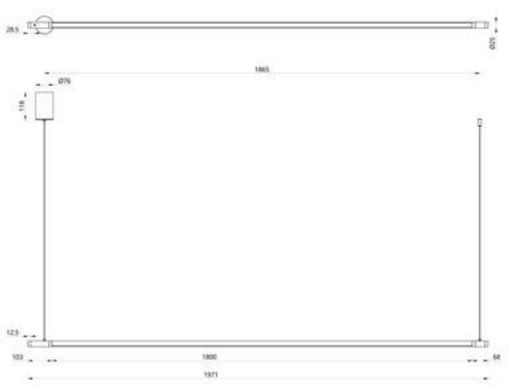

Type of lamp:	1x 24W - Integrated LED
Kelvin:	2700 / 3300 / 4000
Lumen:	940
Material:	Aluminum
Colors available:	Black
Energy label:	G
Operation:	Hand wave sensor
Dimmable:	Yes - hand wave
CCT operation	CCT - Hand wave sensor

H 160 max. cm - W 2.5 cm - L 197.1 cm

Black & Gold

41205/12/30

Add a touch of luxury to your interior with the Lucide MARNIK wall lamp from the Premium collection. This modern and stylish wall lamp is made of high-quality aluminum and features an elegant black finish with a subtle gold interior. With its sleek rectangular design and integrated LED lighting, MARNIK offers a subtle yet impressive light source. Thanks to the adjustable color temperature (2700K-4000K) and dimming function, easily controlled via a hand wave sensor, you can customize the light intensity and ambiance to your preference. Enjoy the combination of advanced technology and refined design with the Lucide MARNIK wall lamp.

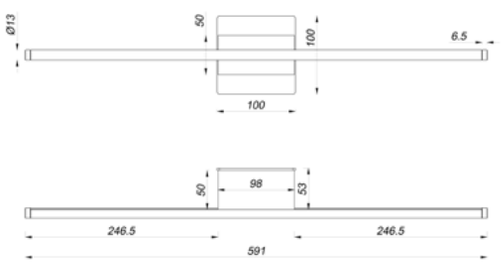

Type of lamp:	1x 13W - Integrated LED
Kelvin:	2700 / 3300 / 4000
Lumen:	480
Material:	Plastic & Aluminum
Colors available:	Black
Energy label:	G
Operation:	Hand wave sensor
Dimmable:	Yes - hand wave
CCT operation	CCT - Hand wave sensor

H 5 cm - W 10 cm - L 59.1 cm

Black & Gold

41205/16/30

Combine luxury and functionality with the Lucide Premium MARNIK wall lamp. This modern fixture, made of high-quality aluminum, exudes style and quality. Thanks to the integrated LED light source (18W), you can enjoy bright and energy-efficient lighting. The color temperature is easily adjustable between 2700K and 4000K via the handwave sensor, allowing you to create the perfect ambiance at any time. Additionally, the lamp is dimmable, giving you full control over the light intensity. With a length of 97.5 cm and a sleek design, MARNIK fits perfectly into contemporary interiors.

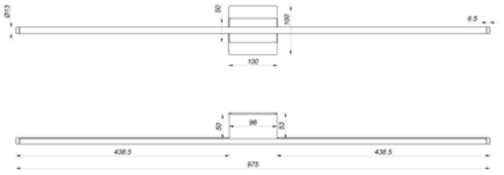

Type of lamp:	1x 18W - Integrated LED
Kelvin:	2700 / 3300 / 4000
Lumen:	930
Material:	Plastic & Aluminum
Colors available:	Black
Energy label:	G
Operation:	Hand wave sensor
Dimmable:	Yes - hand wave
CCT operation	CCT - Hand wave sensor

H 5 cm - W 10 cm - L 97.5 cm

JOAKIM

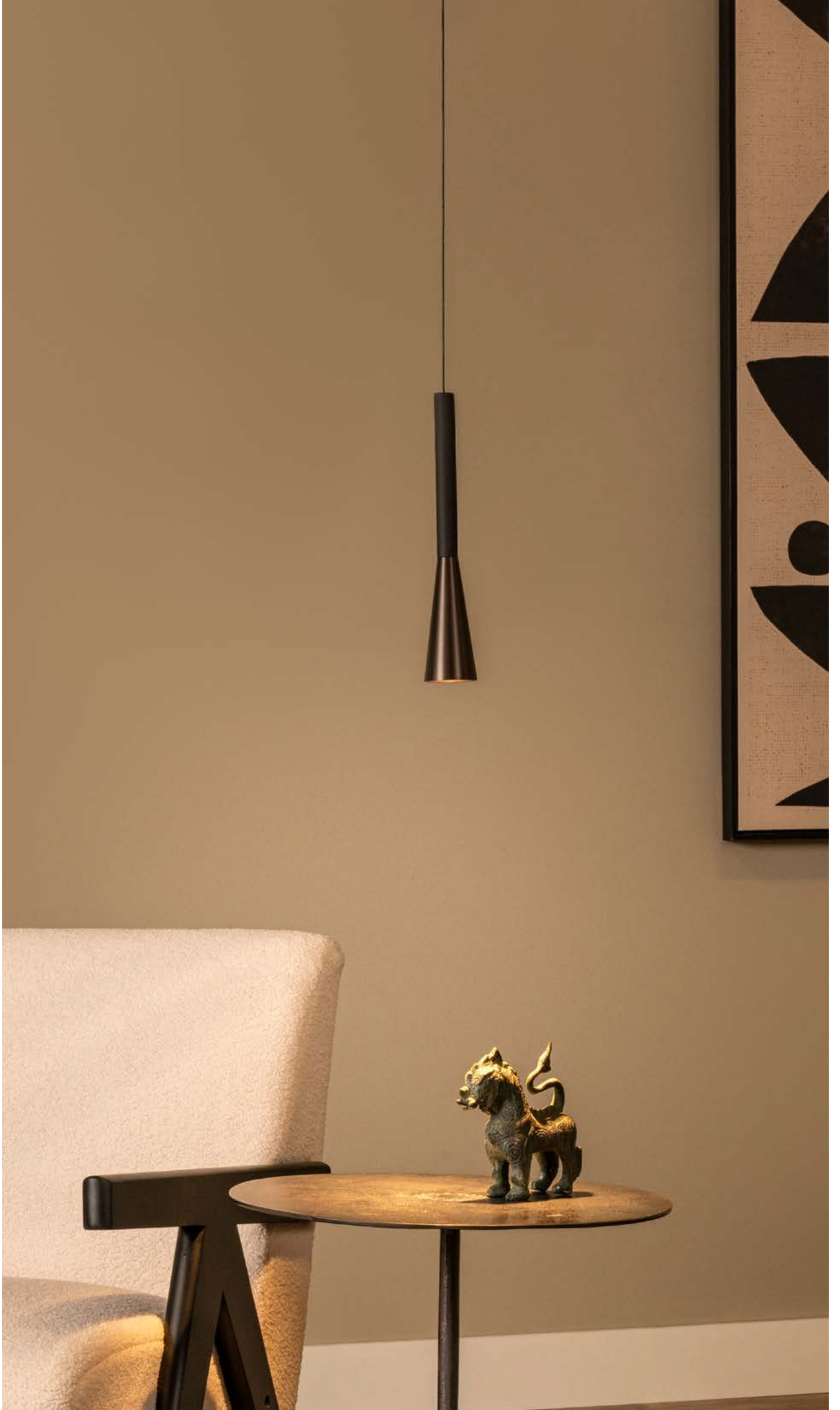

Coffee & Black

24407/07/96

Combining clean lines with everyday practicality, the JOAKIM pendant light suits a wide range of interiors. Inside, it has an integrated LED source up to 7W, from 2700K to 4000K, dimmable. With a width of 7.7 cm and a height of 169.5 cm, this pendant light fits seamlessly above a dining table or kitchen island. Like other Lucide pendant lights, its cord is height adjustable, so it can hang at the ideal level. It comes fitted with a replaceable dimmable LED module, a practical touch for daily use. Light up your space with the JOAKIM today.

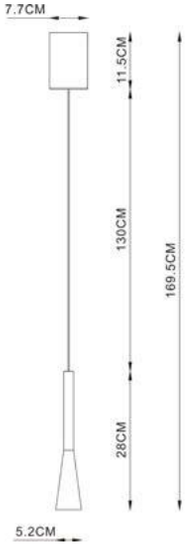

Type of lamp:	1x 7W - Integrated LED
Kelvin:	2700 / 3300 / 4000
Lumen:	480
Material:	Aluminum
Colors available:	Coffee
Energy label:	G
Operation:	Light Switch Control
Dimmable:	Yes
CCT operation	CCT - DIP switch - in the product

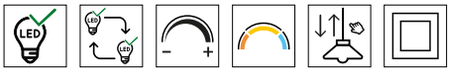

H 169.5 max. cm - W 7.7 cm - L 7.7 cm

Coffee & Black

24407/43/96

Combining clean lines with everyday practicality, the JOAKIM pendant light suits a wide range of interiors. Inside, it has an integrated LED source up to 6.2W, from 2700K to 4000K, dimmable. This version holds 7 light points, giving a fuller spread of light over a table or seating area. With a width of 130 cm and a height of 164.3 cm, this pendant light fits seamlessly above a dining table or kitchen island. Like other Lucide pendant lights, its cord is height adjustable, so it can hang at the ideal level. Light up your space with the JOAKIM today.

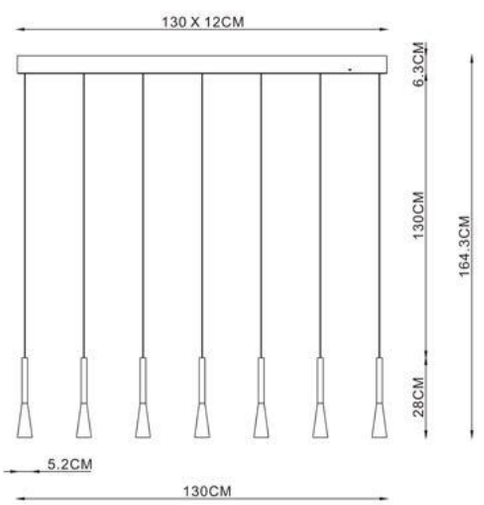

H 164.3 max. cm - W 130 cm - L 12 cm

Type of lamp:	7x 6.2W - Integrated LED
Kelvin:	2700 / 3300 / 4000
Lumen:	2000
Material:	Aluminum
Colors available:	Coffee
Energy label:	G
Operation:	Light Switch Control
Dimmable:	Yes
CCT operation	CCT - DIP switch - on the product

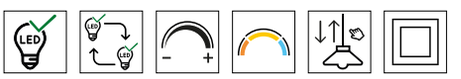

Coffee & Black

24407/86/96

With its understated silhouette, the JOAKIM pendant light works as a pendant lamp for living rooms, bedrooms, hallways and beyond. Inside, it has an integrated LED source up to 7W, from 2700K to 4000K, dimmable. This version holds 12 light points, giving a fuller spread of light over a table or seating area. With a length of 135 cm and a height of 163 cm, this pendant light fits seamlessly above a dining table or kitchen island. Like other Lucide pendant lights, its cord is height adjustable, so it can hang at the ideal level. Bring the JOAKIM home today.

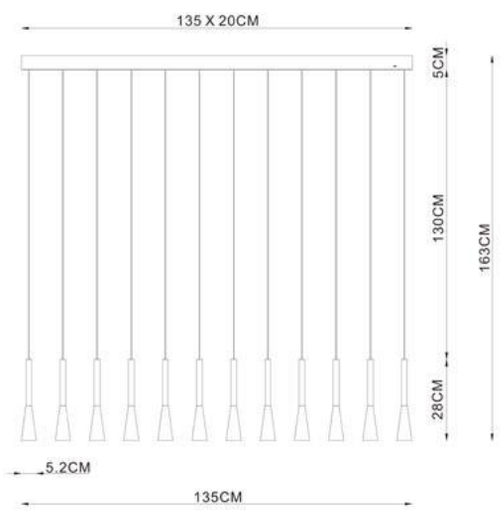

Type of lamp:	12x 7W - Integrated LED
Kelvin:	2700 / 3300 / 4000
Lumen:	3300
Material:	Aluminum
Colors available:	Coffee
Energy label:	G
Operation:	Light Switch Control
Dimmable:	Yes
CCT operation	CCT - DIP switch - on the product

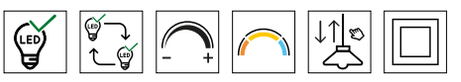

H 163 max. cm - W 20 cm - L 135 cm

LUCIDE
CATALOGUE 2024 - 2025

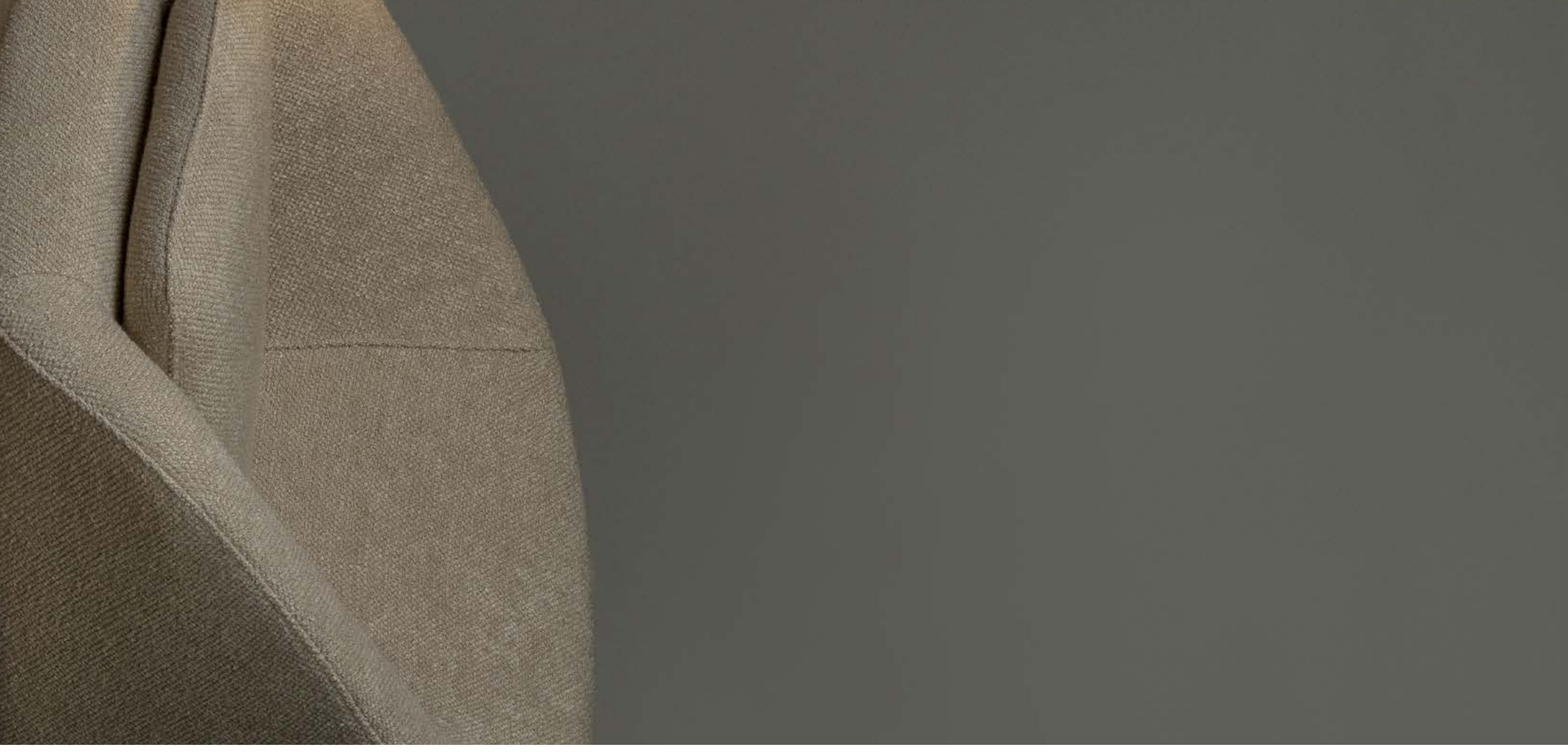

41 41 2/ 40/ 30

KENNETH

INDEX

Black & Matt Gold / Brass

41412/40/30

White & Champagne Color

41412/40/31

Meet the Lucide Premium KENNETH pendant lamp, a stylish eye-catcher that effortlessly combines elegance and functionality. With its generous diameter of 40 cm and a maximum height of 165,2 cm, this modern pendant lamp immediately draws attention above a dining table or in the living room. The integrated 12W LED light source emits warm white light (2700K), creating a cozy and inviting ambiance. Thanks to the height-adjustable suspension, you can easily adapt the KENNETH to your space. The black aluminum housing combined with the matte gold/brass finish gives this pendant lamp a luxurious look that fits perfectly into a modern interior.

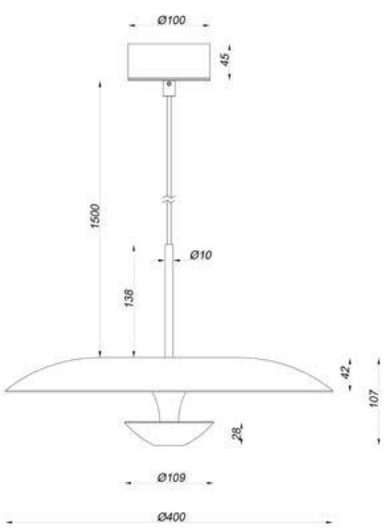

Type of lamp:	1x 12W - Integrated LED
Kelvin:	2700
Lumen:	310
Material:	Aluminum
Colors available:	Black & Matt Gold / Brass & White & Champagne Color
Energy label:	G
Operation:	Light Switch Control
Dimmable:	Yes

H 165.2 max. cm - W 40 cm - L 40 cm

ELEGANT DIFFUSED LIGHT

41 41 2/ 60/ 31

Black & Matt Gold / Brass

41412/60/30

White & Champagne Color

41412/60/31

The Lucide Premium KENNETH pendant lamp adds pure elegance to your interior. With its generous diameter of 60 cm and a maximum height of 166,4 cm, this modern pendant lamp offers a stylish combination of refined design and high-quality lighting. The integrated 16W LED light source emits warm white light (2700K) and is easily dimmable via an external dimmer (not included), allowing you to create the perfect ambiance at any time. The height-adjustable suspension provides maximum flexibility during installation. The KENNETH pendant lamp fits perfectly above a spacious dining table or in a generous seating area.

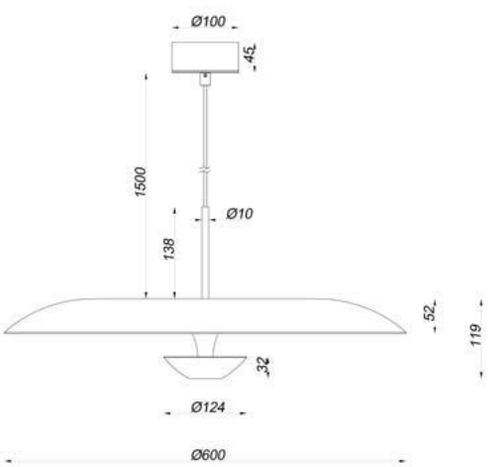

Type of lamp:	1x 16W - Integrated LED
Kelvin:	2700
Lumen:	290
Material:	Aluminum
Colors available:	Black & Matt Gold / Brass & White & Champagne Color
Energy label:	G
Operation:	Light Switch Control
Dimmable:	Yes

H 166.4 max. cm - W 60 cm - L 60 cm

Black & Matt Gold / Brass

41412/80/30

White & Champagne Color

41412/80/31

The Lucide Premium KENNETH pendant lamp combines grand design with high-quality finishing. With an impressive diameter of 80 cm and a maximum height of 166,4 cm, this modern pendant lamp is a true eye-catcher in your interior. The sleek aluminum frame in matte black creates a stylish contrast with the matte gold/brass interior, giving it a luxurious and warm appearance. The integrated 22W LED light source provides atmospheric warm white light (2700K) and is dimmable via an external dimmer (not included), allowing you to set the perfect ambiance at any time.

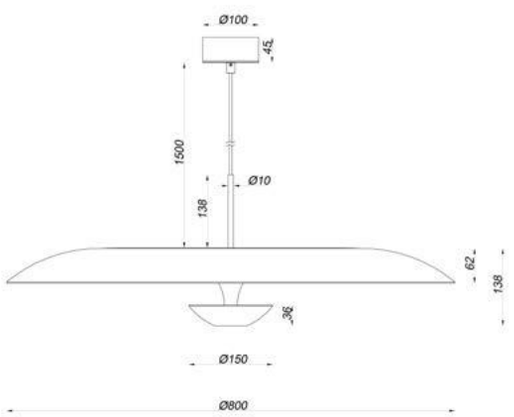

Type of lamp:	1x 22W - Integrated LED
Kelvin:	2700
Lumen:	320
Material:	Aluminum
Colors available:	Black & Matt Gold / Brass & White & Champagne Color
Energy label:	G
Operation:	Light Switch Control
Dimmable:	Yes

H 168.3 max. cm - W 80 cm - L 80 cm

KAMIEN

White & Black

42203/06/31

Add a modern touch to your interior with the Lucide Premium KAMIEN wall lamp. This stylish wall lamp, made of high-quality ceramic, combines clean lines with soft light diffusion. The integrated 6W LED light source emits warm white light (2700K), making it perfect for ambient lighting in the living room, hallway, or bedroom. With its minimalist triangular design, this wall lamp adds a playful yet elegant element to your wall. The KAMIEN connects easily to an external wall switch (not included), allowing you to control the lighting effortlessly. Measuring 20 cm in length and width with a slim height of just 3.8 cm, this wall lamp fits perfectly into modern interiors.

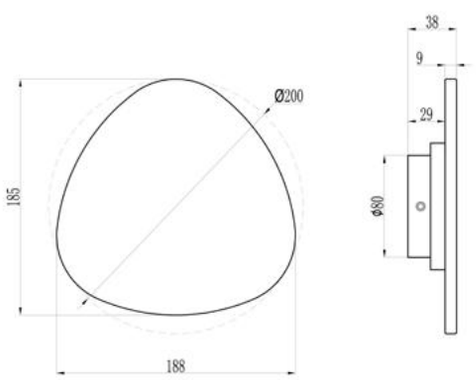

Type of lamp:	1x 6W - Integrated LED
Kelvin:	2700
Lumen:	280
Material:	Ceramics & Metal
Colors available:	White
Energy label:	G
Operation:	Light Switch Control
Dimmable:	No

H 3.8 cm - W 20 cm - L 20 cm

White & Black

42203/10/31

The Lucide Premium KAMIEN wall lamp combines modern design with subtle luxury. This ceramic wall lamp features an elegant triangular shape and a stylish matte white finish. Measuring 30 by 30 cm with a slim height of 5 cm, the KAMIEN adds a playful accent to any modern space. The integrated 11W LED light source emits warm white light (2700K), creating a soft, diffused glow along the wall. Easily connect the wall lamp to an external wall switch (not included) for effortless operation. Thanks to its high-quality ceramic construction and meticulous finish, this wall lamp fits perfectly into modern living rooms, hallways, or bedrooms.

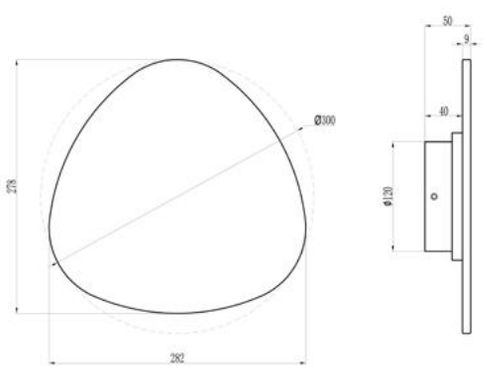

Type of lamp:	1x 11W - Integrated LED
Kelvin:	2700
Lumen:	430
Material:	Ceramics & Metal
Colors available:	White
Energy label:	G
Operation:	Light Switch Control
Dimmable:	No

H 5 cm - W 30 cm - L 30 cm

ELEGANT DIFFUSED LIGHT

4220 3/10/31

BEAUTIFUL OFF

STUNNING ON

White

42203/47/31

The KAMIEN wall light adds character to any interior with its considered, contemporary design. Inside, it has an integrated LED source up to 12W, from 2200K to 3300K, dimmable. It measures 47 cm wide and 46.3 cm high, compact enough for any hallway or living space. Like other Lucide wall lights, it ships with a visible cable, ready to mount and connect. It comes fitted with an integrated dimmable LED lamp, a practical touch for daily use. Finished in white, it blends naturally into a variety of colour schemes and decor styles. Discover the KAMIEN today.

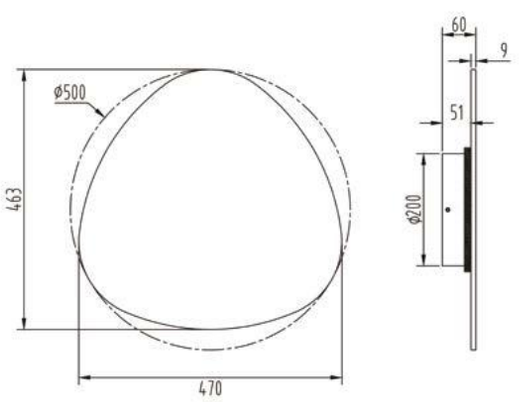

Type of lamp:	1x 12W - Integrated LED
Kelvin:	2200 / 2700 / 3300
Lumen:	475
Material:	Marble & Aluminum
Colors available:	White
Energy label:	G
Operation:	Light Switch Control
Dimmable:	Yes
CCT operation	CCT - DIP switch - on mounting plate

H 46.3 cm - W 47 cm - L 6 cm

ICONS

Extra warm light
2700K

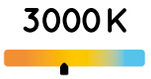

Warm light
3000K

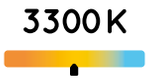

Neutral light
3300K

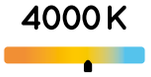

White light
4000K

Integrated LED

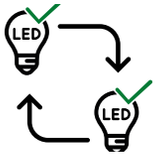

With replaceable LED modules

Dimmable

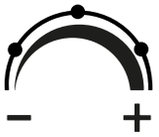

Dim in 3 steps

Dim while changing the colour temperature

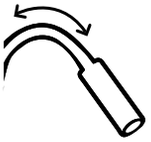

With flexible reading arm

Colour temperature is adjustable in steps

Item can light up in different RGB colours

Charged via accu or batteries

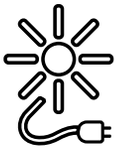

Charges via sunlight

Equipped with a day- night sensor

Sensor can be switched on/off

On/off via motion sensor (PIR/ Microwave)

Deactivatable sensor

With memory function

Controllable via smart device

Touch dimmer on the product

Touch on/off switch on the product

Operate via handwave sensor

On/off switch on the product

Rotatable

Tiltable

Rotatable & tiltable (360 degrees)

Class 1

Class 3

Class 2

Adjustable height via up-down lift system

Adjustable height

Adjustable beam angle

Operate via remote control

Charge the lamp via the wireless charging station

Flexible mounting with a magnetic mounting plate

Charge your device via the wireless charger

Charge your device via a USB port

With music function

LUCIDE

ILLUMINATES YOUR WORLD

LUCIDE BELGIUM
Bisschoppenhoflaan 145
B-2100 Antwerpen-Belgium

www.lucide.com